ELEKTRYKA 2011
Zeszyt 4 (220) Rok LVII

Jerzy BARANOWSKI
Akademia Górniczo-Hutnicza, Katedra Elektrotechniki i Elektroenergetyki

NONLINEAR VELOCITY OBSERVER FOR SEPARATELY EXCITED DC MOTOR

Summary. In this paper an observer for separately excited DC motor is presented. This observer is constructed with an application of nonlinear coordinate change which allows obtaining linear estimation error dynamics. Operation of the observer is illustrated with numerical experiments.

Keywords: nonlinear observer, separately excited DC motor, series dc motor, output injection

NIELINIOWY OBSERWATOR PRĘDKOŚCI DLA SILNIKA OBCOWZBUDNEGO PRĄDU STAŁEGO

Streszczenie. W pracy przedstawiono obserwator dla obcowzbudnego silnika prądu stałego. Obserwator ten zaprojektowano z użyciem nieliniowej zmiany zmiennych umożliwiającej uzyskanie liniowej dynamiki błędu estymacji. Pracę obserwatora zilustrowano za pomocą eksperymentów numerycznych.

Słowa kluczowe: obserwator nieliniowy, obcowzbudny silnik prądu stałego, szeregowy silnik prądu stałego, output injection

1. INTRODUCTION

One of the many technical problems that can be answered by the application of mathematics is problem of estimating the unmeasured variables. In particular this problem is especially important in the aspect of velocity measurement. In practical applications velocity can be obtained by three ways:

1. Direct measurement by specialized devices (tachogenerators).
2. Differentiation of position measurements (obtained via encoders or resolvers).
3. Integration of acceleration measurements (obtained from the accelerometer).

All these approaches require addition of specialized equipment, cost of which is substantial. Possibility of obtaining the velocity signal from other, already measured variables is then very beneficial. For the linear systems, there is a widely known theory of Luenberger

observer [10], which allows state estimation from the output measurements. In nonlinear systems special techniques have to be applied. Many methods of nonlinear state estimation, especially from discrete measurements can be found in [4].

Application of the observers is especially beneficial in the control of electric drives. If there is a possibility of obtaining the unmeasured regulated value of angular velocity allows a substantial reduction of costs, especially in small scale applications where sensors can be in the same price range as the motor itself. Observers can be used to assist control of both simple applications as servos [5] or more complex. More information on advanced methods of dc motor control can be found in [3, 8].

2. SEPARATELY EXCITED DC MOTOR

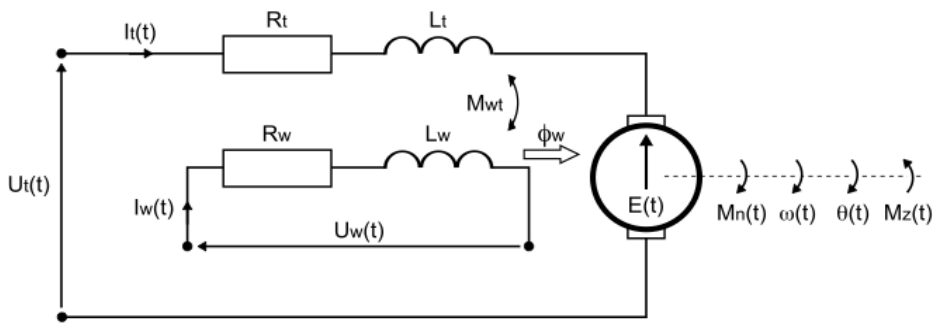

Fig. 1. Separately excited DC motor
Rys. 1. Silnik obcowzbudny prądu stałego

Separately excited DC motors have two winding circuits: field circuit, used for establishing a magnetic field with the motor, and armature circuit, containing a current, interacting with the magnetic field to produce the electric torque resulting in the mechanical rotation. These drives are extensively used in industrial variable speed applications, such as mills, hoists, coolers and machine tools [6]. Diagram of separately excited DC motor is presented in the figure 1 [8].

$$\begin{aligned}
\frac{\mathrm{d}i_{\mathrm{t}}(t)}{\mathrm{d}t} &= \frac{u_{\mathrm{t}}(t)}{L_{\mathrm{t}}} - \frac{R_{\mathrm{t}}}{L_{\mathrm{t}}} i_{\mathrm{t}}(t) - \frac{c_{\mathrm{E}} L_{\mathrm{w}}}{L_{\mathrm{t}}} i_{\mathrm{w}}(t)\omega(t) \\
\frac{\mathrm{d}i_{\mathrm{w}}(t)}{\mathrm{d}t} &= -\frac{R_{\mathrm{w}}}{L_{\mathrm{w}}} i_{\mathrm{w}}(t) + \frac{u_{\mathrm{w}}(t)}{L_{\mathrm{w}}} \\
\frac{\mathrm{d}\omega(t)}{\mathrm{d}t} &= \frac{L_{\mathrm{w}} c_{\mathrm{M}}}{J} i_{\mathrm{w}}(t) i_{\mathrm{t}}(t) - \frac{B_{\mathrm{v}}}{J}\omega(t) - \frac{M_{\mathrm{Z}}}{J}
\end{aligned} \tag{1}$$

Changing notation (and dropping the time argument) we can reformulate system (1) into

$$\begin{aligned}
\dot{x}_1 &= -a_1 x_1 - a_2 x_2 x_3 + v_1 \\
\dot{x}_2 &= -b_1 x_2 + v_2 \\
\dot{x}_3 &= c_1 x_1 x_2 - c_2 x_3 - \tau
\end{aligned} \tag{2}$$

Where: $x_1 = i_t$, $x_2 = i_2$, $x_3 = \omega$, $v_1 = u_t/L_t$, $v_2 = u_w/L_w$ and $\tau = M_Z/J$. Rest of notation changes is self explanatory.

Before presenting the observer for separately excited DC motor a review of results for construction of observer for series DC motor will be included. These results will be used as inspiration for construction of the desired observer.

3. OBSERVER FOR SERIES DC MOTOR

A DC motor in which the field circuit is connected in series with the armature circuit is referred to as a series DC motor. Due to this electrical connection, the torque produced by this motor is proportional to the square of the current (below field saturation), resulting in a motor that produces more torque per ampere of current than any other dc motor. Such a motor is used in applications that require high torque at low speed, such as subway trains and people movers. In fact, the series motor is the most widely used dc motor for electric traction applications [7]. A diagram for series DC motor is presented in the figure 2 [8].

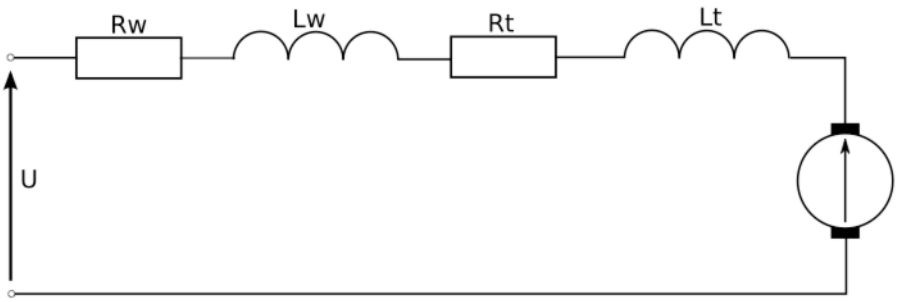

Fig. 2. Series DC motor
Rys. 2. Silnik szeregowy prądu stałego

A mathematical model of this motor comes from the (2) and is given by the following equations

$$\begin{aligned} \dot{x}_1 &= -a_1 x_1 - a_2 x_1 x_3 + v \\ \dot{x}_3 &= c_1 x_1^2 - c_2 x_3 - \tau \end{aligned} \tag{3}$$

It should be noted that x_1 is now the current of the motor as armature and field currents of this motor are equal. Coefficients are slightly different and a detailed description of the model can be found in [8]. We assume, that the only measured state variable is the motor current.

A nonlinear observer for this motor is constructed using the following change of coordinates

$$\begin{aligned} z_1 &= \ln x_1 \\ z_2 &= x_3 \end{aligned} \tag{4}$$

The system (3) under the change of coordinates (4) becomes

$$\begin{aligned} \dot{z}_1 &= -a_1 - a_2 z_2 + \mathrm{e}^{-z_1} v \\ \dot{z}_2 &= c_1 \mathrm{e}^{2z_1} - c_2 z_2 - \tau \end{aligned} \tag{5}$$

Because all of the nonlinearites are functions of only the measured variable a following can be constructed

$$\dot{\hat{\mathbf{z}}} = \begin{bmatrix} 0 & -a_2 \\ 0 & -c_2 \end{bmatrix} \hat{\mathbf{z}} + \begin{bmatrix} -a_1 + \dfrac{v}{x_1} \\ c_1 x_1^2 \end{bmatrix} + \begin{bmatrix} g_1 \\ g_2 \end{bmatrix} (\ln x_1 - \hat{z}_1) \tag{6}$$

Defining the estimation error as $\mathbf{e} = \mathbf{z} - \hat{\mathbf{z}}$ we can see that the error dynamics is linear given by the following differential equation

$$\dot{\mathbf{e}} = \begin{bmatrix} -g_1 & -a_2 \\ -g_2 & -c_2 \end{bmatrix} \mathbf{e} \tag{7}$$

With an appropriate choice of g_1 an g_2 system (7) can become exponentially stable. It should be noted, that this observer operates only as long the current is not zero (generally it should be also positive, but that can be avoided taking the absolute value if necessary [7]). This approach to construction of nonlinear observer was considered in authors earlier works, among the others computation of change of coordinates with Lie derivatives is included in [1], choice of optimal observer parameters in [11] and choice of parameters for obtaining error behaviour of a contraction semigroup in [6].

4. OBSERVER FOR SEPARATELY EXCITED DC MOTOR

Our goal is to formulate a similar approach for the separately excited DC motor in order to construct the observer with linear error dynamics. Let us assume that measurements of both currents in the DC motor (2) are available from the measurements. Let us introduce the following change of coordinates

$$s_1 = \frac{x_1}{x_2}, \quad s_2 = x_2, \quad s_3 = x_3 \tag{8}$$

Under the change of coordinates (8) system (2) becomes

$$\begin{aligned} \dot{s}_1 &= (b_1 - a_1) s_1 - a_2 s_3 + \frac{1}{s_2} v_1 - \frac{s_1}{s_2} v_2 \\ \dot{s}_2 &= -b_1 s_2 + v_2 \\ \dot{s}_3 &= c_1 s_1 s_2^2 - c_2 s_3 - \tau \end{aligned} \tag{9}$$

It can be presented in the vector matrix notation as

$$\dot{\mathbf{s}} = \mathbf{A}\mathbf{s} + \mathbf{f}(s_1, s_2) + \mathbf{B}(s_1, s_2)\mathbf{v} + \mathbf{Z}\tau \tag{10}$$

where

$$\mathbf{A} = \begin{bmatrix} b_1 - a_1 & 0 & -a_2 \\ 0 & -b_1 & 0 \\ 0 & 0 & -c_2 \end{bmatrix} \quad \mathbf{f}(s_1, s_2) = \begin{bmatrix} 0 \\ 0 \\ c_1 s_1 s_2^2 \end{bmatrix} \tag{11}$$

$$\mathbf{B}(s_1, s_2) = \begin{bmatrix} \frac{1}{s_2} & -\frac{s_1}{s_2} \\ 0 & 1 \\ 0 & 0 \end{bmatrix} \tag{12}$$

$$\mathbf{Z} = \begin{bmatrix} 0 \\ 0 \\ -1 \end{bmatrix} \quad \mathbf{s} = \begin{bmatrix} s_1 \\ s_2 \\ s_3 \end{bmatrix} \quad \mathbf{v} = \begin{bmatrix} v_1 \\ v_2 \end{bmatrix} \tag{13}$$

It should be noted, that because x_1 and x_2 were measurable also s_1 is measurable. We propose the following state observer

$$\dot{\hat{\mathbf{s}}} = \mathbf{A}\hat{\mathbf{s}} + \mathbf{f}(s_1, s_2) + \mathbf{GC}(\mathbf{s} - \hat{\mathbf{s}}) + \mathbf{B}(s_1, s_2)\mathbf{v} + \mathbf{Z}\tau \tag{14}$$

where

$$\mathbf{G} = \begin{bmatrix} g_{11} & g_{12} \\ g_{21} & g_{22} \\ g_{31} & g_{32} \end{bmatrix} \quad \mathbf{C} = \begin{bmatrix} 1 & 0 & 0 \\ 0 & 1 & 0 \end{bmatrix} \tag{15}$$

What should be noted, is that if we introduce the error of estimation $\mathbf{e} = \mathbf{s} - \hat{\mathbf{s}}$ it evolves according to the following differential equation

$$\dot{\mathbf{e}} = (\mathbf{A} - \mathbf{GC})\mathbf{e} \tag{16}$$

Equation (16) is linear, and because pair $(\mathbf{C}, \mathbf{A})$ is observable, by the choice of appropriate matrix $\mathbf{G}$, eigenvalues of matrix $(\mathbf{A} - \mathbf{GC})$ can be set as desired, in particular allowing exponential stability of error dynamics. It should be also noted, that similar situation occurs as with series DC motor, as the observer becomes singular for field current equal 0.

5. NUMERICAL EXPERIMENTS

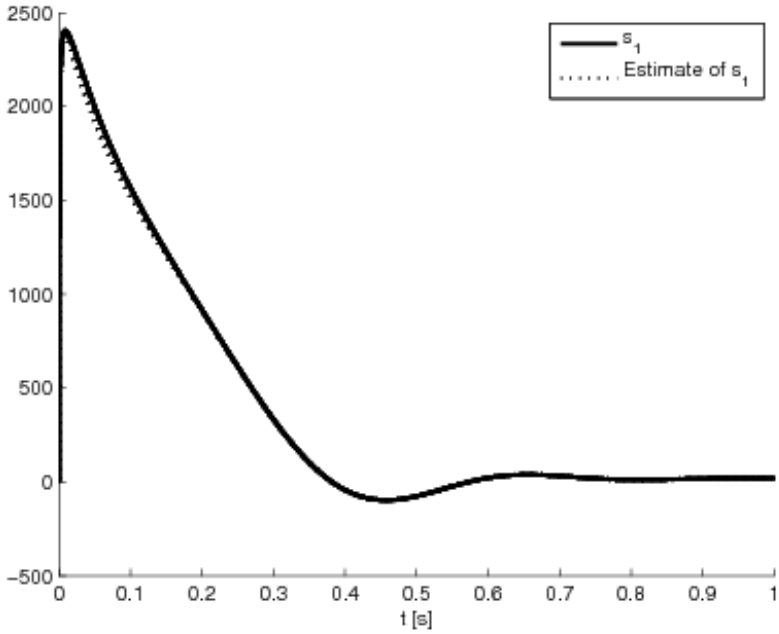

Fig. 3. Estimation of auxiliary variable $s_1 = x_1/x_2 = i_t/i_w$

Rys. 3. Estymacja zmiennej pomocniczej $s_1 = x_1/x_2 = i_t/i_w$

Numerical experiments were performed in MATLAB/Simulink environment. For simulations a multi-step backward difference method of Klopfenstein-Shampine family is used implemented in Matlab as `ode15s` [12]. Parameters of the model were taken from [8]. In presented simulations the problem of restrictions on armature current was not taken under consideration, however it was tested that also for control voltages preventing the rise of armature current over 150% of nominal values observer behaviour is consistent. Initial conditions for the observer were chosen as the nominal values of state variables. The initial field current of the observed model was chosen as a small nonzero value, other variables were set to zero. Eigenvalues of error dynamics were set as real numbers close to -25. Results of simulations are presented in figures 3-5. The most interesting is of course the velocity estimation in figure 5 where we can see that the observer quickly establishes convergence.

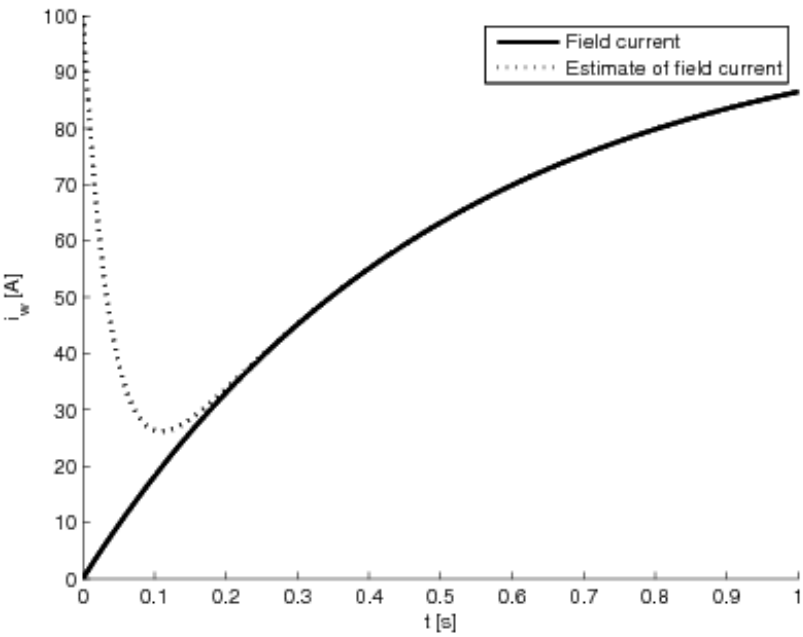

Fig. 4. Estimation of field current $i_w = x_2 = s_2$

Rys. 4. Estymacja prądu wzbudzenia $i_w = x_2 = s_2$

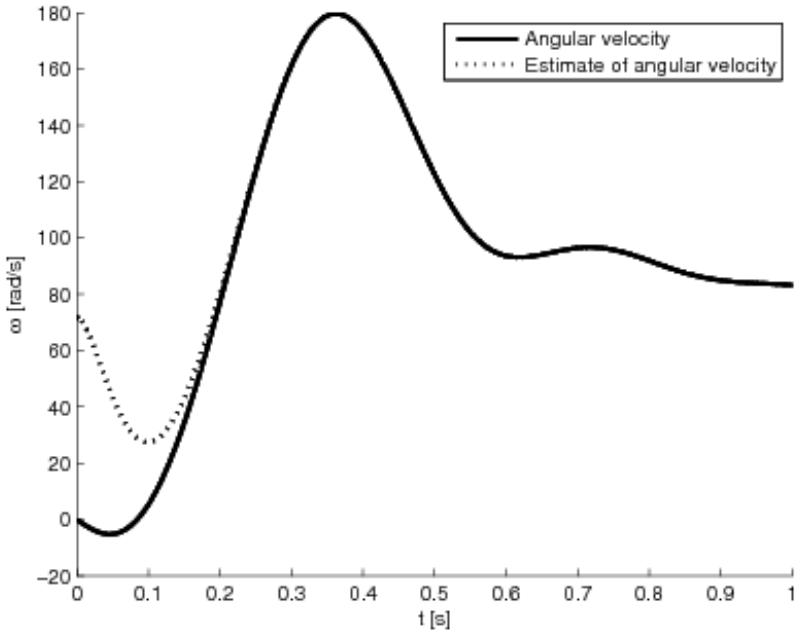

Fig. 5. Estimation of angular velocity $\omega = x_3 = s_3$

Rys. 5. Estymacja prędkości kątowej $\omega = x_3 = s_3$

In figures 6-8 the estimation errors are presented. As it can be easily seen they are vanishing exponentially. Morever it is consistent with the desired linear error dynamics.

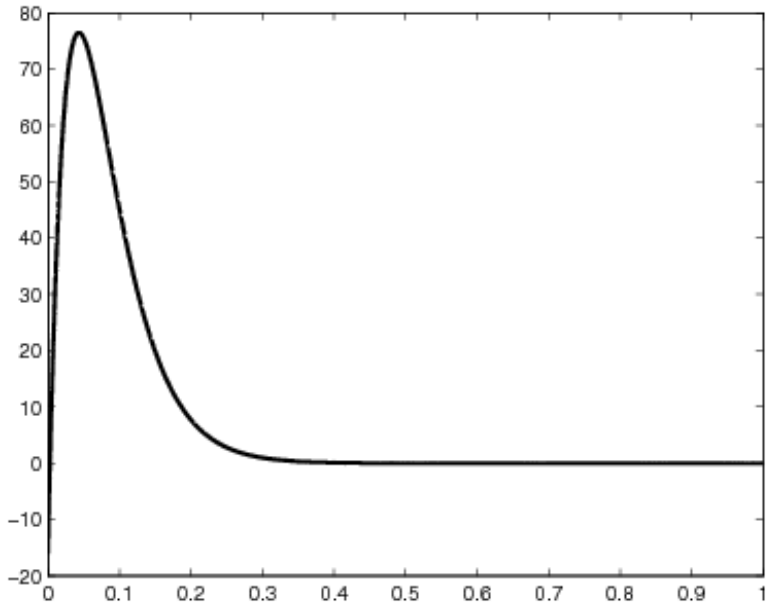

Fig. 6. Estimation error auxiliary variable $s_1 = x_1/x_2 = i_t/i_w$

Rys. 6. Błąd estymacji zmiennej pomocniczej $s_1 = x_1/x_2 = i_t/i_w$

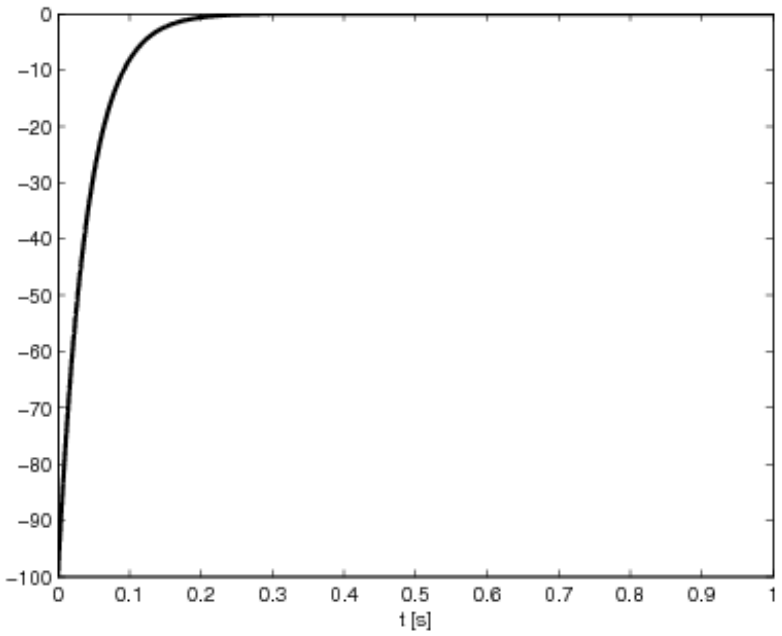

Fig. 7. Estimation error for field current $i_w = x_2 = s_2$

Rys. 7. Błąd estymacji prądu wzbudzenia $i_w = x_2 = s_2$

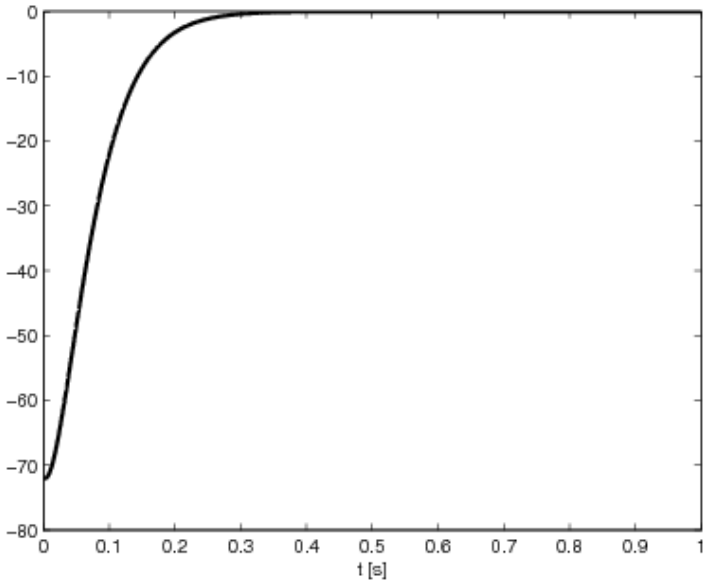

Fig. 8. Estimation error for angular velocity $\omega = x_3 = s_3$

Rys. 8. Błąd estymacji prędkości kątowej $\omega = x_3 = s_3$

6. CONCLUSIONS

In this paper an observer for full nonlinear model of separately excited DC motor was presented. This observer obtained with the nonlinear change of coordinates has a linear error dynamics. This choice of observer allows reliable and fast state estimation thanks to exponential stability inherent to linear systems. Further plans include application of this observer with a continuation of earlier works [2] in order to create time optimal control of separately excited DC motor with bounds on state variables.

ACKNOWLEDGMENT

Author would like to express his gratitude to dr inż. Marek Długosz for lending the figures of DC motors (figures 1 and 2). Work partially financed by National Centre of Science funds for 2011-2013 as a research project. Contract no. N N514 644440.

BIBLIOGRAPHY

1. Baranowski J.: Projektowanie obserwatora dla silnika szeregowego pradu stałego. Półrocznik AGH „Automatyka” 2006, nr 10(1), s. 33-52.

2. Baranowski J., Długosz M.: Sterowanie czasooptymalne silnikiem obcowzbudnym pradu stałego. In: Malinowski, K. and Rutkowski, L. Ed. Sterowanie i Automatyzacja: Aktualne problemy i ich rozwiązania, chapter 2, p. 87-96. Akademicka Oficyna Wydawnicza EXIT, 2008.
3. Baranowski J., Długosz M., Mitkowski W.: Remarks about DC motor control. „Archives of Control Sciences" 2008, Vol. 18(LIV) (3), p. 289-322.
4. Baranowski J.: Odtwarzanie stanu systemów dynamicznych z dyskretnych danych pomiarowych. PhD thesis. Akademia Górniczo-Hutnicza im. Stanisława Staszica, Wydział Elektrotechniki, Automatyki, Informatyki i Elektroniki. Kraków 2010.
5. Baranowski J., Długosz M., Mitkowski W.: Nonlinear observer based control of DC servo. Materiały XXXII Międzynarodowej konferencji z podstaw elektrotechniki i teorii obwodów IC-SPETO, Ustroń 2009, p. 115-116.
6. Baranowski J., Długosz M.: Tuning of angular velocity observers. Materiały XIII Sympozjum Podstawowe Problemy Energoelektroniki, Elektromechaniki i Mechatroniki, Wisła 2009, p. 212-217.
7. Chiasson J., Metha S.: Nonlinear Control of a Series DC Motor: Theory and Experiment. "IEEE Transactions on Industrial Electronics" 1998, Vol. 45(1), p.134-141.
8. Długosz M.: Problemy optymalizacji układów napędowych w automatyce i robotyce. PhD thesis. Akademia Górniczo-Hutnicza im. Stanisława Staszica, Wydział Elektrotechniki, Automatyki, Informatyki i Elektroniki. Kraków 2009.
9. Kaczorek T.: Polynomial and Rational Matrices. Applications in Dynamical Systems Theory. Springer-Verlag, London 2007.
10. Mitkowski W.: Stabilizacja systemów dynamicznych. WNT, Warszawa 1991.
11. Mitkowski W., Baranowski J.: Observer design for series DC motor - multi output approach. Materiały XXX Międzynarodowej konferencji z podstaw elektrotechniki i teorii obwodów IC-SPETO, Ustroń, 23-26.05.2007, p. 135-136. Extended version on CD.
12. Shampine L. F., Gladwell I., Thompson S.: Solving ODEs with MATLAB. Cambridge University Press, 2003.

Recenzent: Prof. dr hab. inż. Marian Pasko
Wpłynęło do Redakcji dnia 10 października 2011 r.

Dr inż. Jerzy BARANOWSKI

AGH Akademia Górniczo-Hutnicza im. Stanisława Staszica w Krakowie,
Wydział Elektrotechniki, Automatyki, Informatyki i Inżynierii Biomedycznej
Katedra Automatyki i Inżynierii Biomedycznej
al. A. Mickiewicza 30, 30-059KRAKÓW

tel.: (012) 6172834; e-mail: jb@agh.edu.pl