ELEKTRYKA 2014
Zeszyt 1 (229) Rok LX

Tadeusz KACZOREK
Bialystok University of Technology

ANALYSIS OF POINTWISE COMPLETENESS AND POINTWISE GENERACY OF DESCRIPTOR ELECTRICAL CIRCUITS BY THE USE OF DRAZIN INVERSE OF MATRICES

Summary. It is shown that every descriptor electrical circuit is a linear system with regular pencil. The pointwise completeness and pointwise generacy of the descriptor electrical circuits is analyzed by the use of Drazin inverse of matrices. Conditions for the pointwise completeness and pointwise generacy of the descriptor electrical circuits are established and illustrated by an example.

Keywords: analysis, Drazin inverse, pointwise completeness, pointwise generacy, descriptor, electrical circuit

ANALIZA PUNKTOWEJ KOMPLETNOŚCI I PUNKTOWEJ GENERACJI DESKRYPTOROWYCH OBWODÓW ELEKTRYCZNYCH PRZY UŻYCIU ODWROTNEJ MACIERZY DRAZINA

Streszczenie. Pokazano, że każdy deskryptorowy obwód elektryczny jest układem liniowym o pęku regularnym. Punktowa zupełność i punktowa generacja deskryptorowych obwodów elektrycznych zostały przebadane przy użyciu odwrotnej macierzy Drazina. Podano warunki punktowej zupełności i punktowej generacji deskryptowych obwodów elektrycznych. Rozważania zilustrowano przykładem.

Słowa kluczowe: analiza, odwrotność Drazina, punktowa zupełność, punktowa generacja, deskryptor, obwód elektryczny

1. INTRODUCTION

Descriptor (singular) linear systems have been considered in many papers and books [1, 2, 5-8, 11-16, 21-23, 28]. The eigenvalues and invariants assignment by state and output feedbacks have been investigated in [14, 22] and the minimum energy control of descriptor linear systems in [16]. In positive systems inputs, state variables and outputs take only non-negative values [9, 20]. Examples of positive systems are industrial processes involving

chemical reactors, heat exchangers and distillation columns, storage systems, compartmental systems, water and atmospheric pollution models. A variety of models having positive linear behavior can be found in engineering, management science, economics, social sciences, biology and medicine, etc. The positive fractional linear systems and some of selected problems in theory of fractional systems have been addressed in monograph [22].

Descriptor standard positive linear systems by the use of Drazin inverse has been addressed in [1, 2, 6, 11-13, 21, 23]. The shuffle algorithm has been applied to checking the positivity of descriptor linear systems in [12]. The stability of positive descriptor systems has been investigated in [28]. Reduction and decomposition of descriptor fractional discrete-time linear systems have been considered in [21]. A new class of descriptor fractional linear discrete-time system has been introduced in [23].

The pointwise completeness and pointwise degeneracy for standard and fractional linear systems have been investigated in [3-5, 10, 17-19, 24-27]. The Drazin inverse of matrices has been applied to find the solutions of the state equations of the fractional descriptor continuous-time linear systems with regular pencils in [13].

In this paper the Drazin inverse of matrices is applied to analysis of pointwise completeness and pointwise generacy of descriptor electrical circuits.

The paper is organized as follows. In section 2 some definitions, lemmas and theorems concerning the descriptor continuous-time linear systems and the Drazin inverse matrices are recalled. The regularity of the descriptor electrical circuits is addressed in section 3. It is shown that every descriptor electrical circuit is a linear system with regular pencil. The pointwise completeness and pointwise generacy of the descriptor electrical circuits is analyzed in section 4. Concluding remarks are given in section 5.

The following notation will be used: $\Re$ - the set of real numbers, $\Re^{n\times m}$ - the set of $n\times m$ real matrices and $\Re^n = \Re^{n\times 1}$, $\Re_+^{n\times m}$ - the set of $n\times m$ matrices with nonnegative entries and $\Re_+^n = \Re_+^{n\times 1}$, M_n - the set of $n\times n$ Metzler matrices (real matrices with nonnegative off-diagonal entries), I_n - the $n\times n$ identity matrix, ker A (im A) - the kernel (image) of the matrix A.

2. PRELIMINARIES

Consider the autonomous fractional descriptor continuous-time linear system

$$E\dot{x}(t) = Ax(t), \tag{1}$$

where $x(t)\in\Re^n$ is the state vector, $E, A\in\Re^{n\times n}$.

It is assumed that det E = 0 but the pencil (E, A) of (1) is regular, i.e.

$$\det[Es - A] \neq 0 \text{ for some } s\in \mathrm{C} \text{ (the field of complex numbers).} \tag{2}$$

Assuming that for some chosen $c \in \mathrm{C}$, $\det[Ec - A] \neq 0$ and premultiplying (1) by $[Ec - A]^{-1}$ we obtain

$$\bar{E}\dot{x}(t) = \bar{A}x(t), \tag{3a}$$

where

$$\bar{E} = [Ec - A]^{-1}E, \ \bar{A} = [Ec - A]^{-1}A. \tag{3b}$$

Note that the equations (1) and (3a) have the same solution $x(t)$.

Definition 2.1. [6, 15] The smallest nonnegative integer q is called the index of the matrix $\bar{E} \in \Re^{n\times n}$ if

$$\operatorname{rank} \bar{E}^q = \operatorname{rank} \bar{E}^{q+1}. \tag{4}$$

Definition 2.2. [6, 15] A matrix $\bar{E}^D$ is called the Drazin inverse of $\bar{E} \in \Re^{n\times n}$ if it satisfies the conditions

$$\bar{E}\bar{E}^D = \bar{E}^D\bar{E}, \tag{5a}$$

$$\bar{E}^D\bar{E}\bar{E}^D = \bar{E}^D, \tag{5b}$$

$$\bar{E}^D\bar{E}^{q+1} = \bar{E}^q, \tag{5c}$$

where q is the index of $\bar{E}$ defined by (3).

The Drazin inverse $\bar{E}^D$ of a square matrix $\bar{E}$ always exists and is unique [6, 15]. If $\det \bar{E} \neq 0$ then $\bar{E}^D = \bar{E}^{-1}$. Some methods for computation of the Drazin inverse are given in [15].

Lemma 2.1. [6, 13, 15] The matrices $\bar{E}$ and $\bar{A}$ defined by (5b) satisfy the following equalities

1. $\bar{A}\bar{E} = \bar{E}\bar{A}$ and $\bar{A}^D\bar{E} = \bar{E}\bar{A}^D$, $\bar{E}^D\bar{A} = \bar{A}\bar{E}^D$, $\bar{A}^D\bar{E}^D = \bar{E}^D\bar{A}^D$, (6a)
2. $\ker \bar{A} \cap \ker \bar{E} = \{0\}$, (6b)
3. $\bar{E} = T\begin{bmatrix} J & 0 \\ 0 & N \end{bmatrix}T^{-1}$, $\bar{E}^D = T\begin{bmatrix} J^{-1} & 0 \\ 0 & 0 \end{bmatrix}T^{-1}$, (6c)

$\det T \neq 0$, $J \in \Re^{n_1\times n_1}$, is nonsingular, $N \in \Re^{n_2\times n_2}$ is nilpotent, $n_1 + n_2 = n$,

4. $(I_n - \bar{E}\bar{E}^D)\bar{A}\bar{A}^D = I_n - \bar{E}\bar{E}^D$ and $(I_n - \bar{E}\bar{E}^D)(\bar{E}\bar{A}^D)^q = 0$. (6d)

Theorem 2.1. [13] The solution to the equation (1) is given by

$$x(t) = e^{\bar{E}^D\bar{A}t}\bar{E}\bar{E}^D w, \tag{7}$$

where $w \in \Re^n$ is arbitrary.

From (7) we have

$$x(0) = x_0 = \bar{E}\bar{E}^D w \tag{8}$$

and

$$x_0 \in \mathrm{im}(\overline{E}\overline{E}^D) \tag{9}$$

where im denotes the image of $\overline{E}\overline{E}^D$.

Theorem 2.2. Let

$$P = \overline{E}\overline{E}^D \text{ and } Q = \overline{E}^D\overline{A}. \tag{10}$$

Then:

1) $P^k = P$ for $k = 2,3,\ldots,$ (11a)

2) $PQ = QP = Q,$ (11b)

3) $P\Phi_0(t) = \Phi_0(t)$. (11c)

Proof is given in [13].

3. REGULARITY OF DESCRIPTOR LINEAR ELECTRICAL CIRCUITS

Consider the electrical circuits composed of resistors, capacitors, coils and voltage (current) sources. It is well-known that such electrical circuits are described by the equation (1) if as the state variables (components of the state vector x) the voltages on the capacitors and currents in the coils are chosen [15, 22]. In this section it will be shown that the descriptor electrical circuit are linear systems with regular pencils.

Theorem 3.1. Every electrical circuit is a descriptor system if it contains at least one mesh consisting with only ideal capacitors and voltage sources or at least one node with branches with coils.

Proof. If the electrical circuit contains at least one mesh consisting of branches with ideal capacitors and voltage sources then the rows of the matrix E corresponding to the meshes are zero rows and the matrix E is singular. If the electrical circuit contains at least one node with branches with coils then the equations written on Kirchhoff's current law for these nodes are algebraic ones and the corresponding rows of E are zero rows and it is singular. □

Theorem 3.2. Every descriptor electrical circuit is a linear system with regular pencil.

Proof. It is well-known [15, 22] that for a descriptor electrical circuit with n branches and q nodes using current Kirchhoff's law we can write $q-1$ algebraic equations and the voltage Kirchhoff's law $n-q+1$ differential equations. The equalities are linearly independent and can be written in the form (1). From linear independence of the equations it follows that the condition (2) is satisfied and the pencil of the electrical circuit is regular.

Example 3.1. Consider the descriptor electrical circuit shown in Fig. 3.1 with given resistances R_1, R_2, R_3; inductances L_1, L_2, L_3 and source voltages e_1 and e_2.

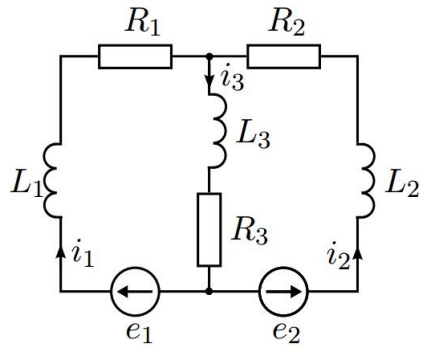

Fig. 3.1. Electrical circuit of Example 3.1
Rys. 3.1. Obwód elektryczny z przykładu 3.1

Using Kirchhoff's laws we can write the equations

$$e_1 = R_1 i_1 + L_1 \frac{\mathrm{d}i_1}{\mathrm{d}t} + R_3 i_3 + L_3 \frac{\mathrm{d}i_3}{\mathrm{d}t} \tag{12a}$$

$$e_2 = R_2 i_2 + L_2 \frac{\mathrm{d}i_2}{\mathrm{d}t} + R_3 i_3 + L_3 \frac{\mathrm{d}i_3}{\mathrm{d}t} \tag{12b}$$

$$0 = i_1 + i_2 - i_3 \tag{12c}$$

The equations (3.1) can be written in the form (1), where

$$x = \begin{bmatrix} i_1 \\ i_2 \\ i_3 \end{bmatrix},\ u = \begin{bmatrix} e_1 \\ e_2 \end{bmatrix},\ E = \begin{bmatrix} L_1 & 0 & L_3 \\ 0 & L_2 & L_3 \\ 0 & 0 & 0 \end{bmatrix},\ A = \begin{bmatrix} -R_1 & 0 & -R_3 \\ 0 & -R_2 & -R_3 \\ 1 & 1 & -1 \end{bmatrix},\ B = \begin{bmatrix} 1 & 0 \\ 0 & 1 \\ 0 & 0 \end{bmatrix}. \tag{13}$$

The assumption (2) for the electrical circuit is satisfied, since

$$\det E = \begin{vmatrix} L_1 & 0 & L_3 \\ 0 & L_2 & L_3 \\ 0 & 0 & 0 \end{vmatrix} = 0$$

and

$$\begin{aligned} \det\left[Es - A\right] &= \begin{vmatrix} L_1 s + R_1 & 0 & L_3 s + R_3 \\ 0 & L_2 s + R_2 & L_3 s + R_3 \\ -1 & -1 & 1 \end{vmatrix} \\ &= \left[L_1\left(L_2 + L_3\right) + L_2 L_3\right] s^2 + \left[R_1\left(L_2 + L_3\right) + R_2\left(L_1 + L_3\right) + R_3\left(L_1 + L_2\right)\right] s \\ &\quad + R_1\left(R_2 + R_3\right) + R_2 R_3 \end{aligned} \tag{14}$$

Therefore, the electrical circuit is a descriptor system with regular pencil.

4. POINTWISE COMPLETENESS AND POINTWISE DEGENERACY

Consider the descriptor linear electrical circuits composed of resistors, capacitors, coils and voltage (current) source described by the equation (1) for $u(t)=0$, $t \geq 0$.

Definition 4.1. The descriptor electrical circuit (1) (for $u(t)=0$, $t \geq 0$) is called pointwise complete for $t=t_f$ if for every final state $x_f \in \Re^n$ belonging to the set

$$x_f \in \mathrm{im}[e^{\bar{E}^D \bar{A} t_f} x_0] \tag{15}$$

there exists a vector of initial conditions $x_0 \in \mathrm{im}[\bar{E}\bar{E}^D] \in X_0$ such that $x(t_f)=x_f \in X_f$.

Remark 4.1. In general case the set of initial conditions X_0 and the set of final state X_f are different. For example, if $X_0 = \mathrm{im}\begin{bmatrix} 1 \\ 0 \end{bmatrix}$ and $e^{\bar{E}^D \bar{A} t} = \begin{bmatrix} 0 & a_{12}(t) \\ a_{21}(t) & a_{22}(t) \end{bmatrix}$, $a_{12}(t)a_{21}(t) \neq 0$, $t \geq 0$ then by (15) we obtain $X_f = \mathrm{im}\begin{bmatrix} 0 \\ a_{21}(t) \end{bmatrix}$.

Note that the initial state x_0 and the final state x_f of the descriptor electrical circuits satisfy the equations written by the use of the Kirchhoff's laws.

Theorem 4.1. The descriptor electrical circuit (1) is pointwise complete for any $t=t_f$ and every final state $x_f \in \Re^n$ satisfying (15).

Proof. Substituting in (7) $t=t_f$ we obtain

$$x_f = e^{\bar{E}^D \bar{A} t_f} x_0 \tag{16}$$

and

$$x_0 = e^{-\bar{E}^D \bar{A} t_f} x_f \in \mathrm{im}[\bar{E}\bar{E}^D] \tag{17}$$

since the matrix $e^{\bar{E}^D \bar{A} t_f}$ is nonsingular for any matrix $\bar{E}^D \bar{A}$, $t_f \geq 0$. □

Definition 4.2. The descriptor electrical circuit (1) (for $u(t)=0$, $t \geq 0$) is called pointwise degenerated in the direction v for $t=t_f$ if there exists a nonzero vector $v \in \Re^n$ such that for all initial conditions $x_0 \in \mathrm{im}[\bar{E}\bar{E}^D]$ the solution of (1) satisfy the condition

$$v^T x_f = 0 \tag{18}$$

where T denotes the transpose.

Theorem 4.2. The descriptor electrical circuit (1) is pointwise degenerated in the direction v defined by

$$v^T \bar{E} = 0 \tag{19}$$

for any $t_f \geq 0$ and all initial conditions $x_0 \in \mathrm{im}[\bar{E}\bar{E}^D]$.

Proof. Postmultiplying (19) by $\overline{E}^D w$ and using $x_0 = \overline{E}\overline{E}^D w$ and (18) we obtain

$$v^T \overline{E}\overline{E}^D w = v^T x_0 = 0 . \tag{20}$$

Taking into account

$$e^{\overline{E}^D \overline{A} t_f} = \sum_{k=0}^{\infty} \frac{(\overline{E}^D \overline{A} t)^k}{k!} \tag{21}$$

and (16) we obtain

$$\begin{aligned} v^T x_f &= v^T \left[\overline{E}\overline{E}^D \overline{A} w + \sum_{k=1}^{\infty} \frac{(\overline{E}^D \overline{A} t_f)^k}{k!} \overline{E}\overline{E}^D \overline{A} w \right] \\ &= v^T \overline{E} \left[\overline{E}^D \overline{A} w + \sum_{k=1}^{\infty} \frac{(\overline{E}^D \overline{A} t_f)^k}{k!} \overline{E}^D \overline{A} w \right] = 0 \end{aligned} \tag{22}$$

since (8) and (19) hold. □

From (19) and (20) for any t_f we have the following conclusion.

Conclusion 4.1. The state vector $x(t)$ of the descriptor electrical circuit satisfies the condition

$$v^T x(t) = 0 \tag{23}$$

for $t \geq 0$.

Example 4.1. (Continuation of Example 3.1)

Substituting (3.1) into (3.3) we obtain

$$E = \begin{bmatrix} 1 & 0 & 1 \\ 0 & 1 & 1 \\ 0 & 0 & 0 \end{bmatrix}, \quad A = \begin{bmatrix} -1 & 0 & -1 \\ 0 & -1 & -1 \\ 1 & 1 & -1 \end{bmatrix}. \tag{24}$$

The matrix A given by (24) is nonsingular and we choose $c = 0$ and we obtain

$$\overline{E} = [Ec - A]^{-1} E = [-A]^{-1} E = \begin{bmatrix} 1 & 0 & 1 \\ 0 & 1 & 1 \\ -1 & -1 & 1 \end{bmatrix}^{-1} \begin{bmatrix} 1 & 0 & 1 \\ 0 & 1 & 1 \\ 0 & 0 & 0 \end{bmatrix} = \frac{1}{3} \begin{bmatrix} 2 & -1 & 1 \\ -1 & 2 & 1 \\ 1 & 1 & 2 \end{bmatrix}, \tag{25a}$$

$$\overline{A} = [Ec - A]^{-1} A = [-A]^{-1} A = -\begin{bmatrix} 1 & 0 & 0 \\ 0 & 1 & 0 \\ 0 & 0 & 1 \end{bmatrix}. \tag{25b}$$

To compute the Drazin inverse of (4.11) we use the Procedure A.1 (given in Appendix).

Step 1. Using (25a) and (A.1) we obtain

$$\overline{E} = VW \tag{26a}$$

where

$$V=\frac{1}{3}\begin{bmatrix}2 & -1\\ -1 & 2\\ 1 & 1\end{bmatrix},\ W=\begin{bmatrix}1 & 0 & 1\\ 0 & 1 & 1\end{bmatrix}. \tag{26b}$$

Step 2. From (A.2), (25a) and (26b) we have

$$W\overline{E}V=\begin{bmatrix}1 & 0 & 1\\ 0 & 1 & 1\end{bmatrix}\frac{1}{3}\begin{bmatrix}2 & -1 & 1\\ -1 & 2 & 1\\ 1 & 1 & 2\end{bmatrix}\frac{1}{3}\begin{bmatrix}2 & -1\\ -1 & 2\\ 1 & 1\end{bmatrix}=\begin{bmatrix}1 & 0\\ 0 & 1\end{bmatrix}. \tag{27}$$

Step 3. Using (A.3), (26b) and (27) we obtain

$$\overline{E}^D=V[W\overline{E}V]^{-1}W=VW=\overline{E}=\frac{1}{3}\begin{bmatrix}2 & -1 & 1\\ -1 & 2 & 1\\ 1 & 1 & 2\end{bmatrix}. \tag{28}$$

From (28) and (25b) we have

$$\overline{E}^D\overline{A}=\frac{1}{3}\begin{bmatrix}-2 & 1 & -1\\ 1 & -2 & -1\\ -1 & -1 & -2\end{bmatrix} \tag{29}$$

and the characteristic polynomial of (29) has the form

$$\det[I_3s-\overline{E}^D\overline{A}]=\begin{vmatrix}s+\frac{2}{3} & -\frac{1}{3} & \frac{1}{3}\\ -\frac{1}{3} & s+\frac{2}{3} & \frac{1}{3}\\ \frac{1}{3} & \frac{1}{3} & s+\frac{2}{3}\end{vmatrix}=s^3+2s^2+s \tag{30}$$

and its zeros are $s_1=s_2=-1$, $s_3=0$.

Note that the characteristic polynomial of the pair (24) has the form

$$\det[Es-A]=\begin{vmatrix}s+1 & 0 & s+1\\ 0 & s+1 & s+11\\ -1 & -1 & 1\end{vmatrix}=3(s^2+2s+1) \tag{31}$$

has the same zeros $s_1=s_2=-1$, $s_3=0$.

Using the Sylvester formula [15] and (29) we obtain

$$e^{\overline{E}^D\overline{A}t}=\frac{1}{3}\begin{bmatrix}2e^{-t}+1 & 1-e^{-t} & e^{-t}-1\\ 1-e^{-t} & 2e^{-t}+1 & e^{-t}-1\\ e^{-t}-1 & e^{-t}-1 & 2e^{-t}+1\end{bmatrix}. \tag{32}$$

From (20) and (25a) we have

$$v^T\overline{E} = [v_1 \quad v_2 \quad v_3]\frac{1}{3}\begin{bmatrix} 2 & -1 & 1 \\ -1 & 2 & 1 \\ 1 & 1 & 2 \end{bmatrix} \tag{33}$$

$$= \frac{1}{3}[2v_1 - v_2 + v_3 \quad 2v_2 - v_1 + v_3 \quad 2v_3 + v_1 + v_2] = [0 \quad 0 \quad 0]$$

and $v^T = [1 \quad 1 \quad -1]$.

The set of admissible initial conditions is

$$X_0 = \mathrm{im}[\overline{E}\overline{E}^D] = \frac{1}{3}\begin{bmatrix} 2 & -1 & 1 \\ -1 & 2 & 1 \\ 1 & 1 & 2 \end{bmatrix}\begin{bmatrix} a_1 \\ a_2 \\ a_3 \end{bmatrix} = \frac{1}{3}\begin{bmatrix} 2a_1 - a_2 + a_3 \\ 2a_2 - a_1 + a_3 \\ 2a_3 + a_1 + a_2 \end{bmatrix} \tag{34}$$

for arbitrary $a_k \quad k = 1,2,3$, i.e. $x_0 \in X_0$.

Note that the admissible initial conditions satisfy the equation (20) since $2a_1 - a_2 + a_3 + 2a_2 - a_1 + a_3 - (2a_3 + a_1 + a_2) = 0$ for any values of a_1, a_2 and a_3.

From (16) and (32) we have

$$x_f = e^{\overline{E}^D\overline{A}t_f}x_0 = \frac{1}{3}\begin{bmatrix} 2e^{-t_f}+1 & 1-e^{-t_f} & e^{-t_f}-1 \\ 1-e^{-t_f} & 2e^{-t_f}+1 & e^{-t_f}-1 \\ e^{-t_f}-1 & e^{-t_f}-1 & 2e^{-t_f}+1 \end{bmatrix}\begin{bmatrix} x_{10} \\ x_{20} \\ x_{30} \end{bmatrix} = \begin{bmatrix} (2x_{10} - x_{20} + x_{30})e^{-t_f} \\ (2x_{20} - x_{10} + x_{30})e^{-t_f} \\ (2x_{03} + x_{10} + x_{20})e^{-t_f} \end{bmatrix} \tag{35}$$

since by (34) $x_{10} + x_{20} - x_{30} = 0$.

Taking into account (35) and $v^T = [1 \quad 1 \quad -1]$ it is easy to check that $v^T x_f = 0$ for any admissible initial conditions belonging to the set (34).

The descriptor electrical circuit is pointwise complete for any t_f and x_f given by (35) and is pointwise degenerated in the direction $v^T = [1 \quad 1 \quad -1]$.

5. CONCLUDING REMARKS

The Drazin inverse of matrices has been applied to analysis of the regularity pointwise completeness and the pointwise generacy of descriptor electrical circuits composed of resistors, capacitors, coils and voltage (current) sources. It has been shown that such electrical circuits are descriptor continuous-time linear systems with regular pencils (Theorem 3.2). Conditions for the pointwise completeness and pointwise generacy have been established (Theorem 4.1 and 4.2). The considerations have been illustrated by simple descriptor electrical circuit. The considerations can be extended to the fractional descriptor electrical circuits.

ACKNOWLEDGMENT

This work was supported under work S/WE/1/11.

BIBLIOGRAPHY

1. Bru R., Coll C., Romero-Vivo S. and Sanchez E.: Some problems about structural properties of positive descriptor systems. „Lecture Notes in Control and Inform. Sci." 2003, Vol. 294, p. 233-240.
2. Bru R., Coll C. and Sanchez E.: Structural properties of positive linear time-invariant difference-algebraic equations. „Linear Algebra Appl." 2002, Vol. 349, p. 1-10.
3. Busłowicz M.: Pointwise completeness and pointwise degeneracy of linear discrete-time systems of fractional order. Zesz. Nauk. Pol. Śląskiej „Automatyka" z. 151, 2008, p. 19-24.
4. Busłowicz M., Kociszewski R., Trzasko W.: Pointwise completeness and pointwise degeneracy of positive discrete-time systems with delays. Zesz. Nauk. Pol. Śląskiej, „Automatyka" z. 145, 2006, p. 55-56 (in Polish).
5. Choundhury A. K.: Necessary and sufficient conditions of pointwise completeness of linear time-invariant delay-differential systems. „Int. J. Control" 1972, Vol. 16, No. 6, 1972, p. 1083-1100.
6. Campbell S.L., Meyer C.D. and Rose N.J.: Applications of the Drazin inverse to linear systems of differential equations with singular constant coefficients. „SIAMJ Appl. Math." 1976, Vol. 31, No. 3, p. 411-425.
7. Dai L.: Singular control systems. „Lectures Notes in Control and Information Sciences" 1989.
8. Guang-Ren Duan: Analysis and Design of Descriptor Linear Systems. Springer, New York 2010.
9. Farina L. and Rinaldi S.: Positive Linear Systems; Theory and Applications. J. Wiley, New York 2000.
10. Kaczorek T., Busłowicz M.: Pointwise completeness and pointwise degeneracy of linear continuous-time fractional order systems. „Journal of Automation, Mobile Robotics & Intelligent Systems" 2009, Vol. 3, No. 1, p. 8-11.
11. Kaczorek T.: Application of Drazin inverse to analysis of descriptor fractional discrete-time linear systems with regular pencils. „Int. J. Appl. Math. Comput. Sci." 2013, Vol. 23, No. 1, p. 29-34.
12. Kaczorek T.: Checking of the positivity of descriptor linear systems by the use of the shuffle algorithm. „Archives of Control Sciences" 2011a, Vol. 21, No. 3, p. 287-298.
13. Kaczorek T.: Drazin inverse matrix method for fractional descriptor continuous-time linear systems. Submitted to Bull. Pol. Ac. Techn. Sci., 2013.

14. Kaczorek T.: Infinite eigenvalue assignment by output-feedbacks for singular systems. „Int. J. Appl. Math. Comput. Sci.” 2004, Vol. 14, No. 1, p. 19-23.
15. Kaczorek T.: Linear Control Systems. Vol. 1, Research Studies Press J. Wiley, New York 1992.
16. Kaczorek T.: Minimum energy control of positive fractional descriptor continuous-time linear systems. „IET Control Theory and Applications” 2013 (in Press).
17. Kaczorek T.: Pointwise completeness and pointwise degeneracy of 2D standard and positive Fornasini-Marchesini models. COMPEL 2011, Vol. 30, No. 2, p. 656-670.
18. Kaczorek T.: Pointwise completeness and pointwise degeneracy of standard and positive fractional linear systems with state-feedbacks. „Archives of Control Sciences” 2009, Vol. 19, p. 295-306.
19. Kaczorek T.: Pointwise completeness and pointwise degeneracy of standard and positive linear systems with state-feedbacks. JAMRIS 2010, Vol. 4, No. 1, p. 3-7.
20. Kaczorek T.: Positive 1D and 2D Systems. Springer-Verlag. London 2002.
21. Kaczorek T.: Reduction and decomposition of singular fractional discrete-time linear systems. „Acta Mechanica et Automatica” 2011, Vol. 5, No. 4, 2011, p. 62-66.
22. Kaczorek T.: Selected Problems of Fractional Systems Theory, Springer-Verlag, Berlin 2011b.
23. Kaczorek T.: Singular fractional discrete-time linear systems. „Control and Cybernetics” 2011, Vol. 40, No. 3, p. 753-761.
24. Olbrot A.: On degeneracy and related problems for linear constant time-lag systems. „Ricerche di Automatica” 1972, Vol. 3, No. 3, p. 203-220.
25. Popov V. M.: Pointwise degeneracy of linear time-invariant delay-differential equations. „Journal of Diff. Equation” 1972, Vol. 11, p. 541-561.
26. Trzasko W., Busłowicz M., Kaczorek T.: Pointwise completeness of discrete-time cone-systems with delays. Proc. EUROCON 2007, Warsaw, p. 606-611.
27. Weiss L.: Controllability for various linear and nonlinear systems models. „Lecture Notes in Mathematics” Vol. 144, Seminar on Differential Equations and Dynamic System II, Springer, Berlin 1970, p. 250-262.
28. Virnik E.: Stability analysis of positive descriptor systems. „Linear Algebra and its Applications” 2008, Vol. 429, p. 2640-2659.

Prof. dr hab. inż. Tadeusz Kaczorek
Politechnika Białostocka; Wydział Elektryczny
Katedra Automatyki i Elektroniki
ul. Wiejska 45d
15-351 Białystok
e-mail: kaczorek@isep.pw.edu.pl

A. PROCEDURE FOR COMPUTATION OF DRAZIN INVERSE MATRICES

To compute the Drazin inverse $\overline{E}^D$ of the matrix $\overline{E} \in \Re^{n\times n}$ defined by (3b) the following procedure is recommended.

Procedure A.1.

Step 1. Find the pair of matrices $V \in \Re^{n\times r}$, $W \in \Re^{r\times n}$ such that

$$\overline{E} = VW\,,\ \operatorname{rank} V = \operatorname{rank} W = \operatorname{rank} \overline{E} = r\,. \tag{A.1}$$

As the r columns (rows) of the matrix V (W) the r linearly independent columns (rows) of the matrix $\overline{E}$ can be chosen.

Step 2. Compute the nonsingular matrix

$$W\overline{E}V \in \Re^{r\times r}\,. \tag{A.2}$$

Step 3. The desired Drazin inverse matrix is given by

$$\overline{E}^D = V[W\overline{E}V]W\,. \tag{A.3}$$

Proof. It will be shown that the matrix (A.3) satisfies the three conditions (7) of Definition 2.2. Taking into account that $\det WN \neq 0$ and (A.1) we obtain

$$[W\overline{E}V]^{-1} = [WVWV]^{-1} = [WV]^{-1}[WV]^{-1}\,. \tag{A.4}$$

Using (7a), (A.1) and (A.4) we obtain

$$\overline{E}\overline{E}^D = VWV[W\overline{E}V]^{-1}W = VWV[WV]^{-1}[WV]^{-1}W = V[WV]^{-1}W \tag{A.5a}$$

and

$$\overline{E}^D\overline{E} = V[W\overline{E}V]^{-1}WVW = V[WV]^{-1}[WV]^{-1}WVW = V[WV]^{-1}W\,. \tag{A.5b}$$

Therefore, the condition (7a) is satisfied.

To check the condition (7b) we compute

$$\begin{aligned}\overline{E}^D\overline{E}\overline{E}^D &= V[W\overline{E}V]^{-1}WVWV[W\overline{E}V]^{-1}W = V[WVWV]^{-1}WVWV[W\overline{E}V]^{-1}W\\ &= V[W\overline{E}V]^{-1}W = \overline{E}^D.\end{aligned} \tag{A.6}$$

Therefore, the condition (7b) is also satisfied.

Using (7c), (A.1), A.3 and (A.4) we obtain

$$\begin{aligned}\overline{E}^D\overline{E}^{q+1} &= V[W\overline{E}V]^{-1}W(VW)^{q+1} = V[WV]^{-1}[WV]^{-1}WVV^qW^{q+1}\\ &= V[WV]^{-1}V^qW^{q+1} = VV^{q-1}W^q = (VW)^q = \overline{E}^q\end{aligned} \tag{A.7}$$

where q is the index of $\overline{E}$.

Therefore, the condition (7c) is also satisfied.