ELEKTRYKA 2015
Zeszyt Rok

Mariusz TROJNAR
Rzeszów University of Technology

COMPUTER AIDED ANALYSIS OF TRANSIENT STATES IN LINEAR CIRCUITS

Summary: The article presents examples of application of chosen computer programs in the analysis of transient states in linear circuits. Analytical solution of two circuits (calculation of currents and voltage) has been presented on the basis of classical method and Laplace transform method. The circuits were then subjected to computer simulation in Multisim and PSpice programs. Moreover, Mathcad program was used to solve one of the calculation examples. Each of the computer programs mentioned can be successfully applied to analysis of transient states in electrical circuits, both for educational purposes and in scientific research.

Keywords: Linear circuits, transient, computer programs, Laplace transfer method

KOMPUTEROWE WSPOMAGANIE ANALIZY STANÓW NIEUSTALONYCH W OBWODACH LINIOWYCH

Streszczenie. W artykule przedstawiono przykłady zastosowania wybranych programów komputerowych w analizie stanów nieustalonych w obwodach liniowych. W oparciu o metodę klasyczną oraz metodę operatorową zilustrowano analityczne rozwiązanie dwóch obwodów (obliczanie prądów i napięcia), które następnie poddano symulacji komputerowej w programach Multisim oraz PSpice. Do rozwiązania jednego z przykładów obliczeniowych wykorzystano także program Mathcad. Każdy z wymienionych programów komputerowych z powodzeniem może znaleźć zastosowanie w analizach stanów nieustalonych w obwodach elektrycznych, zarówno w aspekcie dydaktycznym, jak i naukowym.

Słowa kluczowe: Obwody liniowe, stany nieustalone, programy komputerowe, metoda operatorowa

1. INTRODUCTION

Analyzing time courses of diverse processes taking place in electric circuits, two different states must be considered: steady state and transient state. In steady state the circuit response

is identical with the input function, while in transient state the time responses differ in character from the input function [2]. While analyzing transient states in linear electric circuit, voltage u and current i may be represented by the sum of two components, i.e. steady state component (corresponding to steady state of the circuit) and transient component (corresponding to transient state). This is expressed by the relationships:

$$u = u_u + u_p \tag{1}$$

and

$$i = i_u + i_p \tag{2}$$

For linear circuits three general solving methods are used: standard method, Laplace transform method and state variable analysis. The standard method relates to classical methods of solving differential-integral equations. The Laplace transform method uses a Laplace transform. The state variable analysis is matrix-based and it is sometimes called state-space analysis [1].

To analyze transient state phenomena it is necessary to be acquainted with the initial state of the circuit, i.e. initial conditions (coil current and capacitor voltage), which may or not be equal to zero. If initial conditions are zero, then at the start the circuit had been devoid of energy. Since coil and capacitors are the only elements accumulating energy, then apart from the power sources, voltages/currents of all capacitors/coils in the circuit will influence the circuit performance when circuit topology is changed (e.g. at time instant $t = 0$ s) [4].

In the computer analysis, e.g. in Pspice but also in other programs, the initial conditions which may be provided in the problem or determined from the data given, are written into declarations of coils and capacitors. It is also convenient to use switches available in the computer programs (see examples in Fig.1); in such case there is no need for determining the initial conditions beforehand. At a proper time instant t (selected in accordance with problem data), the switch position will change and circuit configurations before and after commutation will be accounted for in the results of computer simulation of the circuit.

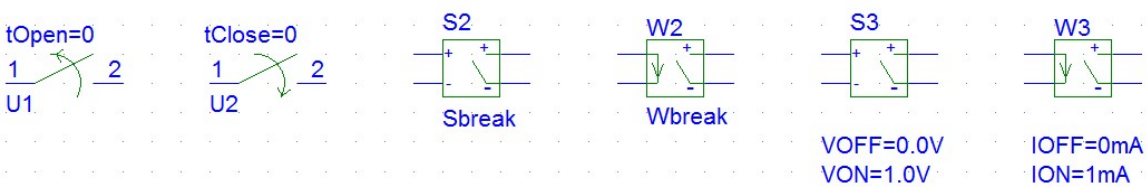

Rys.1. Przełączniki w programie PSpice Student
Fig.1. Switches in PSpice Student program

Numerous computer programs for analysis of electric circuit are available nowadays. For many years they have been used in education and research.

Generation of circuits in these programs is usually based upon selecting appropriate elements from available and extensive libraries of elements, connecting them in accordance with a given scheme, and running computer simulation in order to obtain e.g. circuit response to a specified input function. The diversity of available analysis makes it possible to investigate a given circuit from different standpoints.

The results obtained via computer simulations are accessible as text (numerical values of given quantities, e.g. current or voltage) and graphic (e.g. waveforms in time domain). Examples of using computer programs Multisim and Pspice for analysis of transient states in linear circuits are presented in this paper.

2. CALCULATION EXAMPLE I

The data for circuit elements (Fig. 2) are as follows: $e_1(t)$ = E1 = 5 V, $e_2(t)$ = E2 = 15 V, R_1 = 3 Ω, L_1 = 1.5 H, R_2 = 7 Ω, C_2 = 1 mF. Calculate current flowing through inductor $i_{L1}(t)$ and voltage drop across the inductor $u_{L1}(t)$.

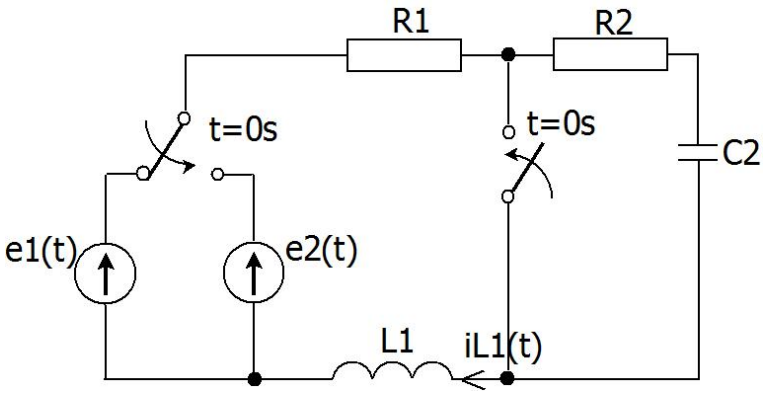

Rys.2. Rozważany obwód I zawierający dwa przełączniki
Fig.2. Circuit I with two switches

Analytical solution. On the basis of standard method, the following approach is used:

a) Initial condition is set (t < 0 s). Circuit diagram will assume the form as in Fig.3a.
Since source $e_1(t)$ is a dc voltage source, and capacitor C_2 for dc circuit behaves like a break in the circuit, then

$$i_{L1}(t) = 0\,\text{A} \text{ and } i_{L1}(0) = 0\,\text{A} \tag{3}$$

a) b)

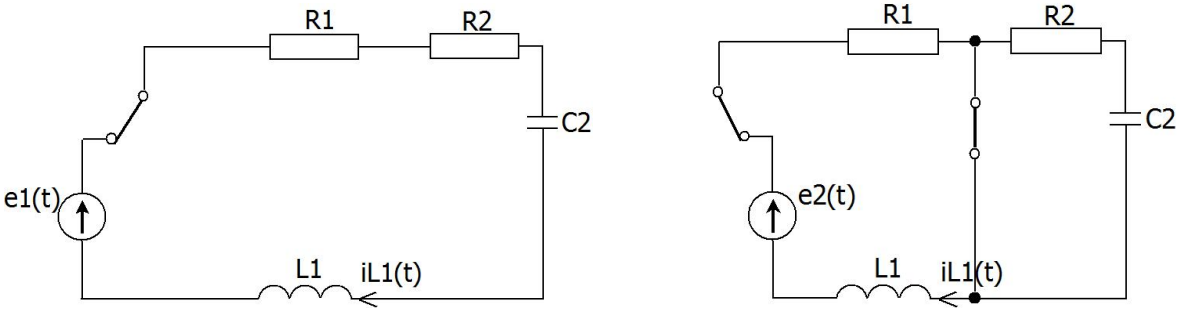

Rys.3. Obwód I przed (a) i po (b) komutacji
Fig.3. Circuit I before (a) and after (b) switching

b) We calculate current flowing through the coil in steady state. Steady-state circuit (the switches are closed at $t = 0$ s) is shown in Fig.3b. Source $e_2(t)$ is also a dc source. After some time has elapsed after the change in switches' positions, the magnetic flux in the coil does not vary any more. In accordance with Faraday's law, the voltage across the coil terminals will decrease to zero. The entire supply voltage will be present across the terminals of resistor R_1, and the coil will behave like a short-circuited element. Direct current will flow through the circuit. This will be a steady-state component of the current:

$$i_{L1u}(t) = \frac{E_2}{R_1} = \frac{15}{3} = 5\,\mathrm{A} \tag{4}$$

$$i_{L1u}(0) = 5\,\mathrm{A} \tag{5}$$

For formal reasons only the notation shows that the steady-state component (input component) is time-dependent.

c) We write down the differential equation describing the operation of circuit after commutation. For sake of clarity, instead of using $u_{R1}(t)$ notation u_{R1} will be used etc. According to Second Kirchhoff Law for the circuit loop and at every time instant, the sum of voltage drops across resistor R_1 and coil L_1 is equal to the supply voltage

$$u_{R1} + u_{L1} = e_2(t) \tag{6}$$

Since $u_{R1} = R_1\, i_{L1}$, $u_{L1} = L_1 \dfrac{d\, i_{L1}}{d\, t}$, and $e_2(t) = E_2$, Eq. (6) may be expressed as

$$R_1\, i_{L1} + L_1 \frac{d\, i_{L1}}{d\, t} = E_2 \tag{7}$$

In order to determine transient component of coil current, we solve the homogenous equation

$$R_1\, i_{L1p} + L_1 \frac{d\, i_{L1p}}{d\, t} = 0 \tag{8}$$

By separating the variables, we find the transient component of current i_{L1p}

$$i_{L1p} = A\,\mathrm{e}^{-\frac{R1}{L1}t} \tag{9}$$

The wanted coil current is the sum of transient and steady-state components:

$$i_{L1}(t) = i_{L1p}(t) + i_{L1u}(t) \tag{10}$$

$$i_{L1}(t) = A\,\mathrm{e}^{-\frac{R1}{L1}t} + \frac{E_2}{R_1} \tag{11}$$

d) We calculate the unknown constant A using the initial condition:

$$i_{L1}(t) = i_{L1p}(t) + i_{L1u}(t) \tag{12}$$

$$i_{L1}(0) = i_{L1p}(0) + i_{L1u}(0) \tag{13}$$

$$i_{L1}(0) = A\,\mathrm{e}^{-\frac{R1}{L1}\cdot 0} + \frac{E_2}{R_1} = A + \frac{E_2}{R_1} \tag{14}$$

$$A = i_{L1}(0) - \frac{E_2}{R_1} = 0 - \frac{20}{4} = -5 \tag{15}$$

Finally, it may be written that

$$i_{L1}(t) = A\mathrm{e}^{-\frac{R_1}{L_1}t} + \frac{E_2}{R_1} = -5\mathrm{e}^{-\frac{3}{1,5}t} + \frac{20}{4} = (5 - 5\mathrm{e}^{-2t}) = 5(1 - \mathrm{e}^{-2t})\ \mathrm{A} \tag{16}$$

e) Voltage across the coil in transient state is calculated:

$$u_{L1}(t) = L_1 \frac{d\, i_{L1}(t)}{d\, t} = 1{,}5 \frac{d}{d\, t}\left(5 - 5\mathrm{e}^{-2t}\right) = 15\,\mathrm{e}^{-2t}\ \mathrm{V} \tag{17}$$

Computer solution. The problem has been solved using two computer programs: Multisim and PSpice. Circuit set up in Multisim program is shown in Fig.4. Apart from voltage sources, coil and capacitor (data provided in the problem), two switches S1 and S2 have been used. The switching time is $1 \cdot 10^{-12}$s (1ps). Three additional voltage sources (Vdod1, Vdod2, Vdod3) have also been input into the circuit in order to obtain correct current waveforms for branches where these sources are connected (similar "tricks" are also used in PSpice

program). After *Transient* analysis parameters had been set, waveforms of L1 coil current and voltage have been obtained (Fig.5).

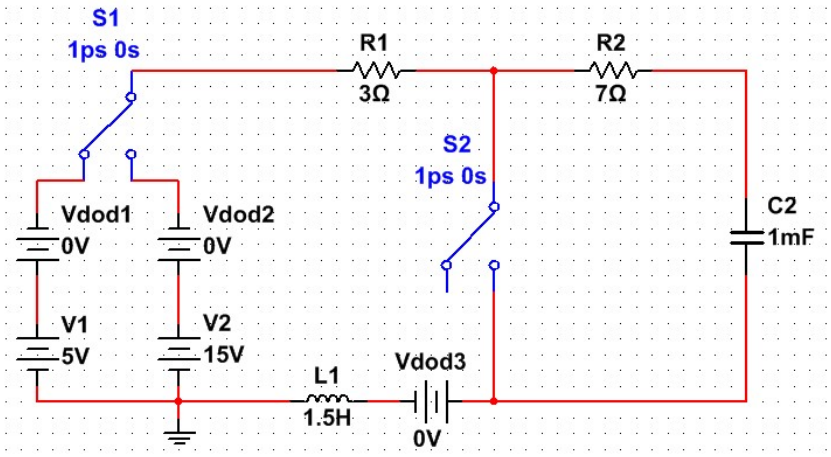

Rys.4. Obwód I przygotowany w programie Multisim
Fig.4. Circuit I set up in Multisim program

a)

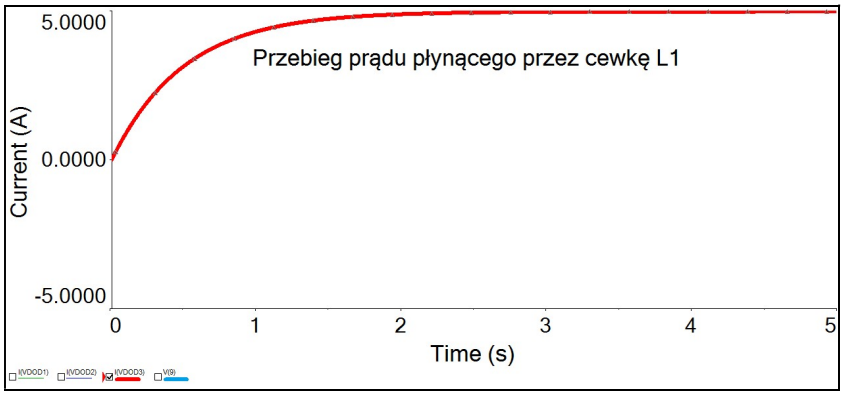

b)

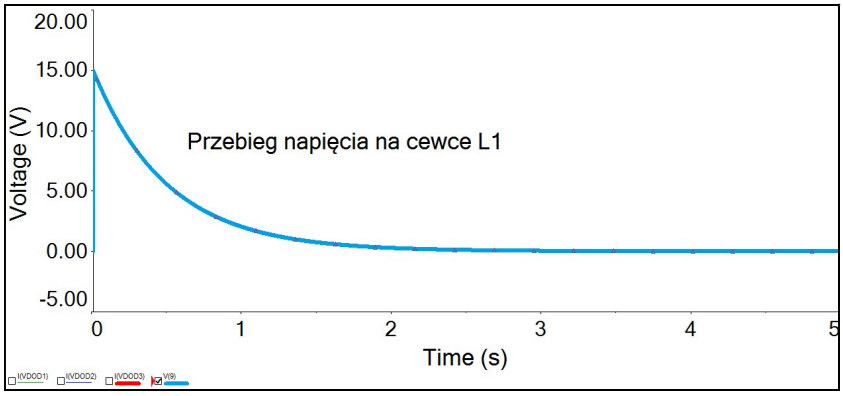

Rys.5. Wyniki analizy w programie Multisim: prąd (a) oraz napięcie na cewce L_1 (b)
Fig.5. Results of analysis in Multisim program: current (a) and voltage (b) in coil L_1

A circuit resembling the one put together in Multisim program (Fig.4) may also be set up in PSpice, it will also include switches. In this case the method of solving the problem will be described by text file, which may be prepared in any text editor. Certain rules governing the creation of such files must be adhered to (these are rules due to the program pecularities). Example of text file and results of analysis (coil current and voltage waveforms) are shown in Fig.6. This file has been prepared for PSpice software and it contains structure of circuit after commutation, i.e. this is the circuit consisting of voltage source E_2, resistor R_1 and coil L_1 connected in series. In the text line where coil is declared, an initial condition must also be included (in this particular case IC=0); this must be calculated beforehand. For circuit containing switches (Fig.4) we do not have to declare initial conditions for coil and capacitor in the windows dedicated to those elements.

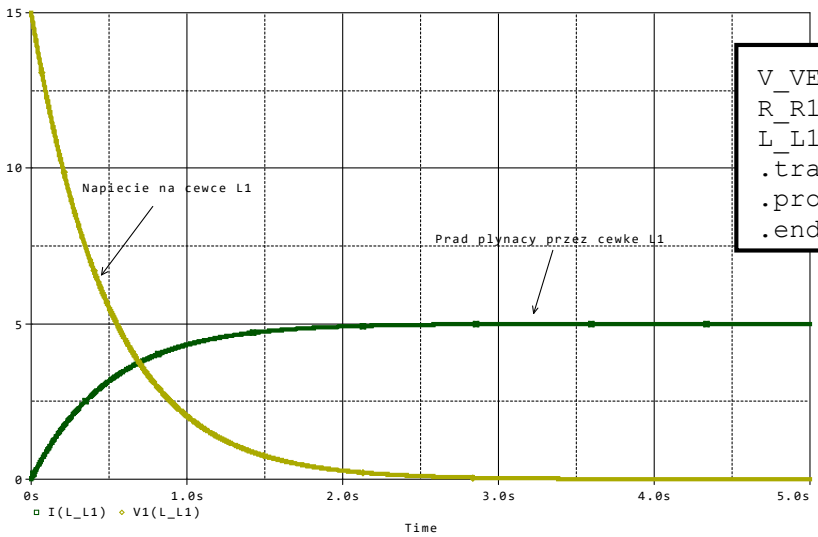


```
V_VE 1 0  15
R_R1 1 2  3
L_L1 2 0  1.5  IC=0
.tran 0.001 5 0 0.001 UIC
.probe
.end
```

Rys.6. Wyniki analizy w programie PSpice oraz plik wsadowy (*.cir)
Fig.6. Batch file (*.cir) and results of analysis in PSpice program

Results obtained with the help of computer programs are consistent with results of analytical calculations.

3. CALCULATION EXAMPLE II

Let us consider the circuit shown in Fig. 7a. Element data are as follows: $e_2(t) = E_2 = 20$ V, $R_1 = 0.25\ \Omega$, $L_1 = 0.25$ H, $R_2 = 20\ \Omega$, $R_3 = 0.5\ \Omega$, $C_3 = 0.1$ mF. Calculate currents in circuit branches.

Analytical solution. One of the methods of analyzing transient states in linear circuits is the Laplace transform method, which consists in algebraization of differential-integral equations describing the circuit with the help of Laplace transform.

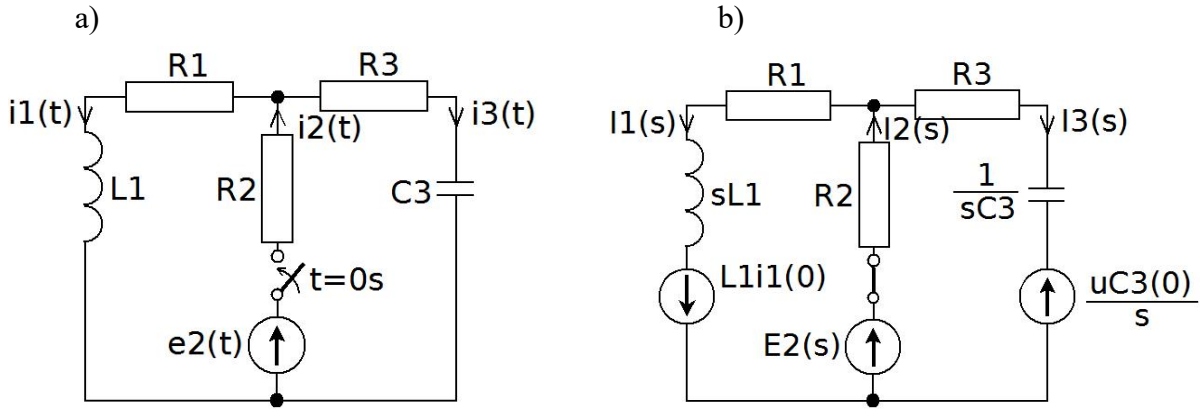

Rys.7. Rozważany obwód II (a) oraz schemat operatorowy po komutacji (b)
Fig.7. Circuit II in time domain (a) and s-domain after switching (b)

The first action after commutation (i.e. change in circuit configuration due to opening or closing a switch at a particular time instant - in this case switch is closed at $t = 0$ s) is drawing up of s-domain circuit scheme (Fig.7b).

Since we have zero initial conditions (coil current i1(0) and capacitor voltage uc3(0)), then the values of sources shown in the s-domain scheme will also be equal to zero (these are source L1i1(0) connected in series with coil L1 and source uC3(0)/s connected in series with capacitor C3).

Currents flowing in circuit branches are determined with the help of Mathcad software. Successive steps of the calculation are written down in this program in much the same way as if a sheet of paper were used. Some know-how as to analysis of electric circuits is indispensable, since successive equations must be devised in order solve the problem.

Impedances of different branches are as follows:

$$Z_1(s) = R_1 + sL_1 = 0.25 + 0.25s \tag{18}$$

$$Z_2(s) = R_2 = 20 \tag{19}$$

$$Z_3(s) = R_3 + \frac{1}{sC_3} = 0.5 + \frac{10000}{s} \tag{20}$$

Current $I_2(s)$ may be determined from the relationship:

$$I_2(s)=\frac{E_2(s)}{Z_2(s)+\dfrac{Z_1(s)\cdot Z_3(s)}{Z_1(s)+Z_3(s)}}=\frac{0.988}{s}+\frac{1.658}{s+389.247}+\frac{1.670}{s+101.509} \tag{21}$$

where $E_2(s)=\dfrac{E_2}{s}=\dfrac{20}{s}$.

Currents I_1(s) and I_3(s) are determined from following formulas:

$$I_1(s)=\frac{\dfrac{Z_1(s)\cdot Z_3(s)}{Z_1(s)+Z_3(s)}\cdot I_2(s)}{Z_1(s)}=\frac{39024.4+1.951s}{s\left(s+389.247\right)\left(s+101.509\right)} \tag{22}$$

$$I_3(s)=\frac{\dfrac{Z_1(s)\cdot Z_3(s)}{Z_1(s)+Z_3(s)}\cdot I_2(s)}{Z_3(s)}=\frac{1.316}{s+389.247}-\frac{0.341}{s+101.509} \tag{23}$$

The inverse transform of expressions (21), (22) and (23) (it is obtained by using invlaplace function in Mathcad software) lets us obtain the solution in time domain:

$$i_1(t)=\left[0.988+0.342\cdot e^{-389.247\cdot t}-1.329\cdot e^{-101.509\cdot t}\right]\text{A} \tag{24}$$

$$i_2(t)=\left[0.988+1.658\cdot e^{-389.247\cdot t}-1.670\cdot e^{-101.509\cdot t}\right]\text{A} \tag{25}$$

$$i_3(t)=\left[1.316\cdot e^{-389.247\cdot t}-0.341\cdot e^{-101.509\cdot t}\right]\text{A} \tag{26}$$

The obtained results have been verified using the Multisim and PSpice programs mentioned earlier. The circuit scheme and results of simulation (branch current waveforms) from Multisim program are shown in Fig.8. The batch file (*.cir) which may be used for circuit analysis in PSpice program together with simulation results obtained from PSpice are shown in Fig.9.

The circuit for Pspice simulation may also be prepared in graphical form, i.e. it may be drawn (the procedure and its outcome is similar to that used in Multisim program - see Fig.8) and then analyzed. In cases (text and graphic mode), the equations for obtained current waveforms (24), (@5) and (26) may be introduced into graphical postprocessor and compared with those obtained by PSpice analysis.

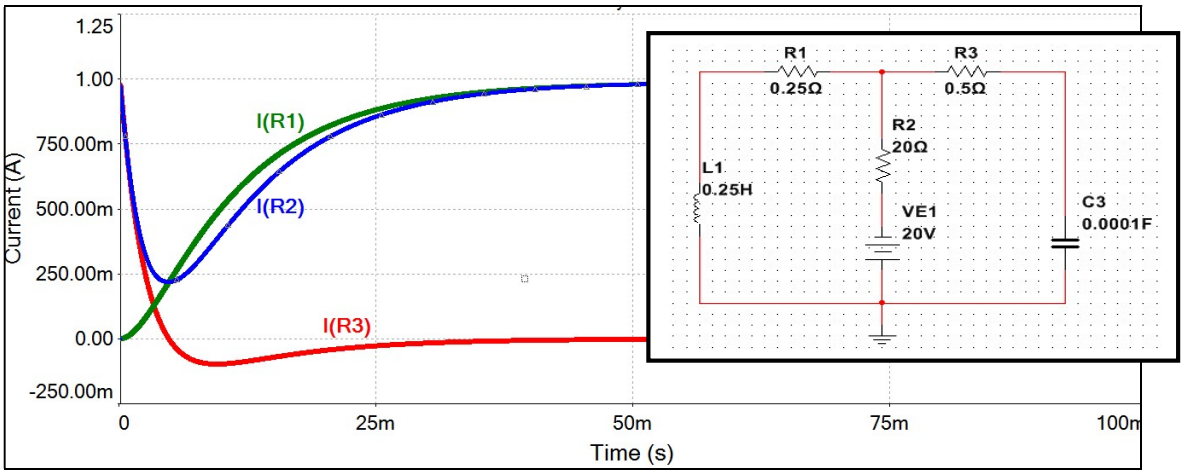

Rys.8. Rozwiązanie uzyskane w programie Multisim wraz z obwodem poddanym symulacji
Fig.8. Solution obtained in Multisim program and simulated circuit

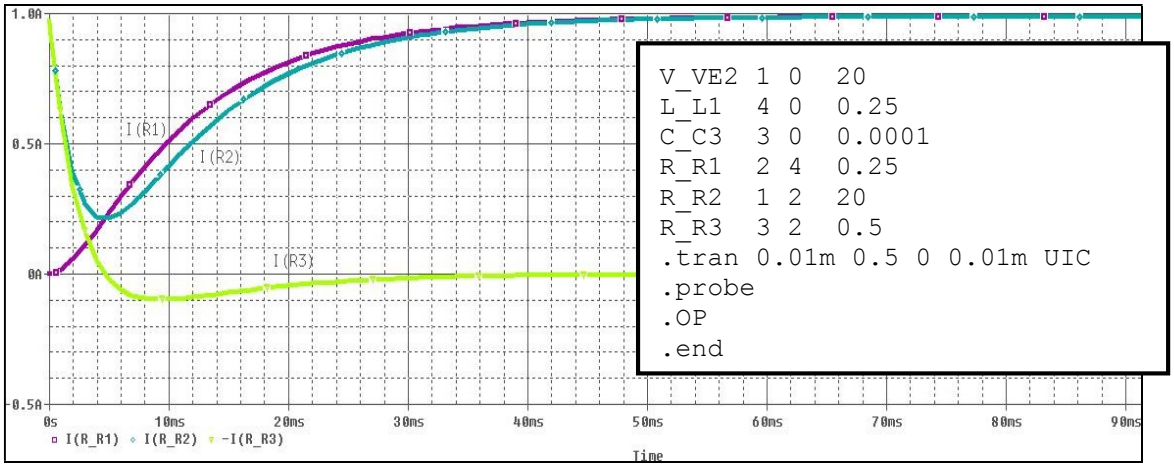

Rys.9. Wyniki analizy w programie PSpice oraz plik wsadowy (*.cir)
Fig.9. Batch file (*.cir) and results of analysis in PSpice program

4. CONCLUSION

Examples of applying Multisim and PSpice programs to transient state analysis of linear electric circuits are presented in the paper. Analytical solutions for two circuits have been described, one using classical method and the other using Laplace transform method. In both cases the obtained results have been verified by computer simulations run in either of the programs mentioned above. The circuits subjected to computer analysis were prepared either in graphic mode (by connecting elements selected from library of elements), e.g. as a circuit shorting the switches (turning switches on or off required a definite set time) of in text mode (declaration of elements in accordance with rules dictated by the program together with declaration of analysis type). In each simulated case results have been consistent the results

obtained by analytical analysis. Mathcad software has been used for analysis of one of the exemplary circuits; this program may successfully assist circuit analysis of transient states, both for educational purposes and in scientific research. If Mathcad software is used, it is necessary to possess some knowledge of the analyzed subject matter; some command of Mathcad program is also required, since calculations are run in accordance with relationships (equations) set by user.

It is worthwhile to use PSpice (or LTspice) and/or Multisim programs. At the initial stage of analysis they do not require any knowledge from a specified field (in this case electric circuit theory). Role played by the user is here limited to drawing of circuit in graphic editor (which can be done by anybody) or writing the circuit in a text file (*.cir file in PSpice program). Next, type of analysis is selected (and its parameters are set) for a given investigated circuit and a computer simulation is run. Interpretation of the obtained results is left to the user.

REFERENCES

1. Bolkowski S.: Elektrotechnika teoretyczna. Teoria obwodów elektrycznych. Tom 1. Wydawnictwa Naukowo-Techniczne, Warszawa, 1986.
2. Metoda równań różniczkowych w rozwiązaniu stanu nieustalonego w obwodach, Dostępny w WWW: http://wazniak.mimuw.edu.pl/index.php?title=PEE_Modu%C5%82_7. Dostęp 07.09.2015r.
3. Szczepański A., Trojnar M.: Obwody i Sygnały. Oficyna Wydawnicza Politechniki Rzeszowskiej, Rzeszów 2006.
4. Szczepański A., Trojnar M.: Symulacja komputerowa stanów nieustalonych w obwodach liniowych, VI Sympozjum "Modelowanie i symulacja komputerowa w technice MiS 2008”, Łódź, 2008,str. 157-162.

Dr inż. Mariusz Trojnar
Rzeszów University of Technology
Faculty of Electrical and Computer Engineering
ul. W. Pola 2
35-959 Rzeszów
Tel. (17) 865-1294; e-mail: trojnar@prz.edu.pl