ELEKTRYKA 2016
Zeszyt 1 (237) Rok LXII

Przemysław PTAK, Krzysztof GÓRECKI, Janusz ZARĘBSKI
Gdynia Maritime University

POWER SUPPLY CIRCUITS USED IN LED LAMPS

Summary. Load resistance and line voltage impact on electric parameters of power supply circuits used in LED lamps are discussed in this paper. Investigations were performed for two power supplies typically used in CLA25 and CLA60 lamps offered by OSRAM Semiconductor. Measurements were performed for load resistance ranging from 10 Ω to 10 kΩ and for the alternating input voltage of line frequency and RMS value ranging from about 10 V to 230 V. The impact of power supplies of LED lamps on deformation of the current drawn from the network was also analysed.

Keywords: LED lamps, power supply circuits, measurements

UKŁADY ZASILAJĄCE STOSOWANE W LAMPACH LED

Streszczenie. Praca dotyczy wpływu rezystancji obciążenia oraz napięcia sieci elektroenergetycznej na parametry elektryczne zasilaczy stosowanych w lampach LED. Do badań wybrano dwa zasilacze zawarte w lampach typu CLA25 i CLA60 firmy OSRAM Semiconductor. Badania przeprowadzono dla rezystancji obciążenia z zakresu od 10 Ω do 10 kΩ oraz dla napięcia przemiennego o częstotliwości sieci elektroenergetycznej i wartości skutecznej z zakresu od około 10 V do 230 V. Podczas badań eksperymentalnych przeanalizowano także wpływ zasilaczy lamp LED na zniekształcenia prądu pobieranego z sieci elektroenergetycznej.

Słowa kluczowe: lampy LED, układy zasilające, pomiary

1. INTRODUCTION

Semiconductor light sources and in particular LED lamps used for lighting purposes [1, 2] are usually supplied by alternating voltage from the power network. The most popular circuit for LED diode polarization and one which has been used for many years, is a resistor connected in series with a power supply and the supplied element [3]. However, with this polarization method, the power losses at polarization resistor are too high. That is why the

manufacturers of integrated circuits have begun the production of dedicated chips for LED lamp supplies (and for different LED configurations in lamps) [4, 5, 6].

Measurements of electrical, optical and thermal parameters of the power supplies and LED lamps are conducted in many research centres around the world [7, 8, 9]. The methods of measuring thermal impedance of LED lamp and power input directly from the power network have been presented in [7, 8]. The influence of supply voltage on selected operational parameters of different light sources such as traditional filament bulbs, fluorescent lamps and LED lamps has been presented in [9]. If the cited publications are analyzed, we may arrive at a conclusion that authors have focused their attention on measurements of operational parameters versus the supply voltage of LED lamp; they do not seem to have attended to the operational parameters and thermal effects of the LED lamps versus the load resistance of the power supply.

LED lamp designs utilize LED modules supplied with a given current ranging typically from 120 to 1200 mA [4]. That is why LED lamp power supplies should operate with output current stabilization; in order to increase efficiency of such circuits SMPS (switching-mode power supply) with stabilization of output current against a wide range of variation in supply voltage and load resistance should be used. Using power supplies with inferior parameters may lead to deterioration in operational parameters of LED lamps, and in the worst case a premature damage may take place. Other important features of LED lamp power supply operation are thermal operating conditions of the power supply and LED module. If the lamp interior is too hot, then LED lamp may be prematurely damaged.

Results of measurements of two power supplies integrated with LED lamps manufactured by OSRAM semiconductor are presented in current paper. CLA25 lamp supply stabilizes the output voltage, while CLA60 lamp supply operates as SMPS of the output current in the wide range of load resistance and voltage input from power network.

LED lamp construction, electrical schemes of two power supplies mentioned above and the test circuit for measuring power supply and LED lamp parameters are presented in following section of the paper. The obtained results of experimental tests of CLA25 and CLA60 LED lamp are presented in last section.

2. LED LAMP CONSTRUCTION

The drawing of CLA 25 LED lamp of the Parathom family and manufactured by OSRAM Semiconductor is shown in Fig.1. The lamp consists of LED module containing several to more than ten diodes connected in series or in parallel, plastic lens which determines the angle of emitted luminous flux, radiator dissipating the LED module heat into the environment and switched-mode power supply. This power supply stabilizes either output current or output voltage. The presented lamp is equipped with a standard E27 screw-cap.

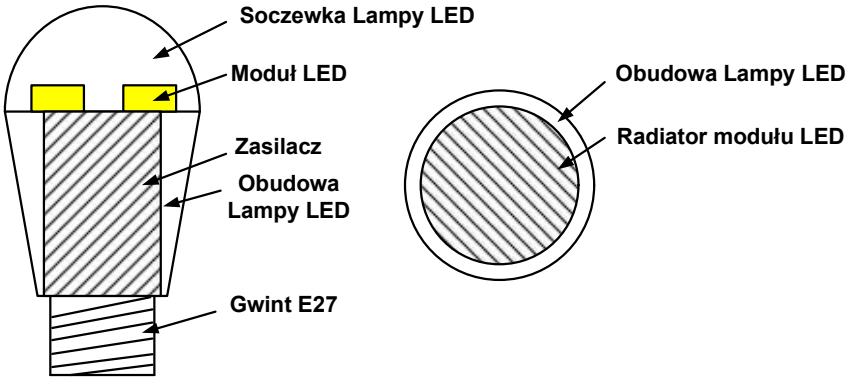

Fig.1. Construction of LED lamp
Rys. 1. Budowa lampy LED.

CLA60 lamp is characterized by rated power twice as high and equal to 8 W, and by similar rated voltage ranging from 220 to 240 V. CLA60 features luminous flux which is three times higher than in CLA25 lamp. Its durability is identical as that of CLA25 lamp, i.e. 15000 hours.

The authors have analyzed the network connections of the printed circuits containing the discussed power supplies; basing on this analysis, they have drawn electrical diagrams of these supplies. The diagrams are shown in Figs.2 and 3. In both circuits flyback converter is used. CLA25 lamp power supply is more complex than that of CLA60 lamp. The power supply of CLA25 LED lamp contains AC/DC converter UC1, type LNK606GG by Power Integrations, with the power MOSFET transistor connected between S and D pins. This converter may operate at high switching frequency equal to 85 kHz, which facilitates minimization of pulse transformer dimensions. The power supply is protected from overvoltages by two varistors WAR_1 and WAR_2, rated at 450 V and from reversed polarization of the output voltage by D_2 diode.

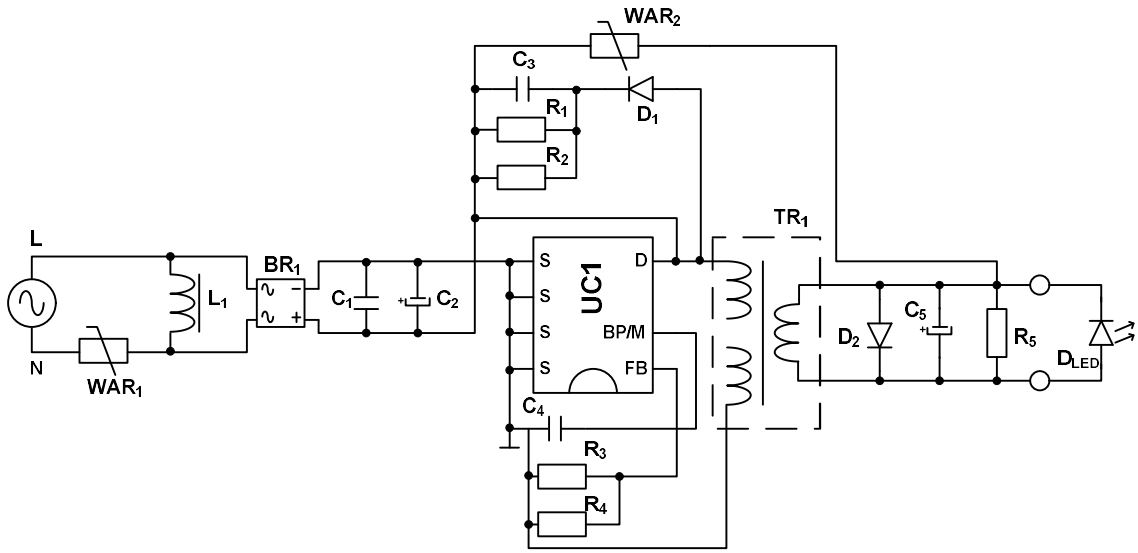

Fig.2. Electrical scheme of CLA25 lamp power supply
Rys. 2. Schemat elektryczny zasilacza lampy CLA25.

In case of CLA25 lamp, the power supply stabilizes output voltage against a wide range of input voltage and load resistance changes. The power supplies of tested LED lamps contain input circuits suppressing the higher harmonics of input currents. Input circuit consists of C_1 and C_2 elements for CLA25 lamp power supply, and C_1, C_2, R_1 and L_1 elements for CLA60 lamp power supply. The investigated circuits are also equipped with negative feedback loop consisting of elements R_3 and R_4 (CLA25 lamp power supply) and R_2 – R_4, R_{10}, C_7, C_8 and FB_2 (CLA60 lamp power supply).

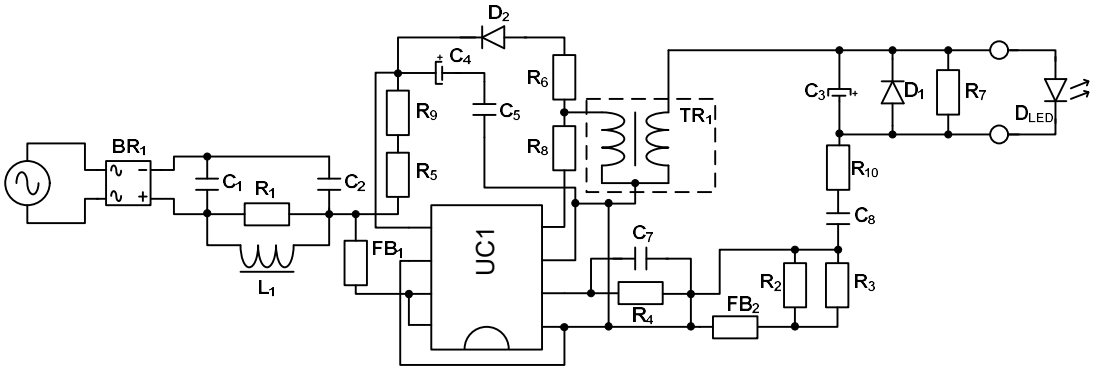

Fig.3. Electrical scheme of CLA60 lamp power supply
Rys. 3. Schemat elektryczny zasilacza lampy CLA60.

The investigated power supplies are loaded with LED modules. The CLA25 lamp module contains four LED diodes connected in series, while CLA60 lamp module contains thirteen LED diodes connected also in series. The nominal forward current of CLA25 lamp LED module is I_F = 350 mA, while for LED module of CLA60 lamp the forward current is I_F = 120 mA.

3. TEST RESULTS

Steady-state characteristics of power supplies for CLA25 and CLA60 lamps have been measured using the test circuits of electrical and optical parameters shown in Fig.4.

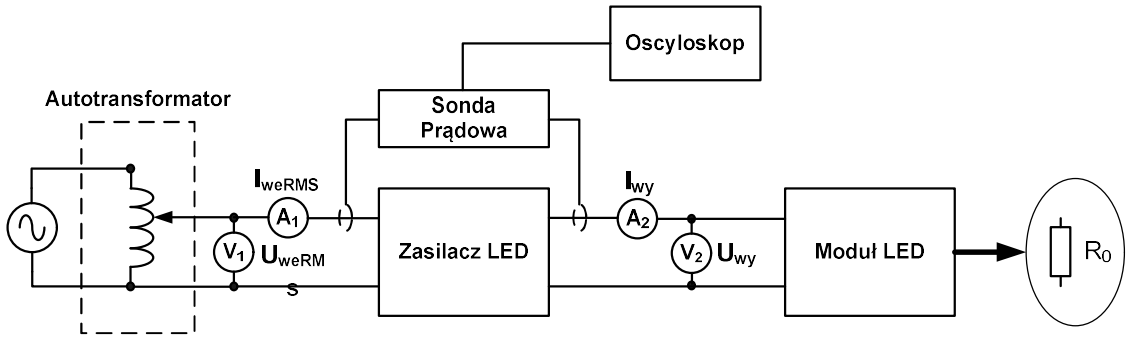

Fig.4. Measurement scheme for testing LED lamp power supplies
Rys. 4. Układ do badania zasilaczy lamp LED

The dependence of the input and output current and output voltage of CLA25 and CLA60 LED lamp power supplies on the load resistance R_o is shown in Figs. 5 and 6.

a) b)

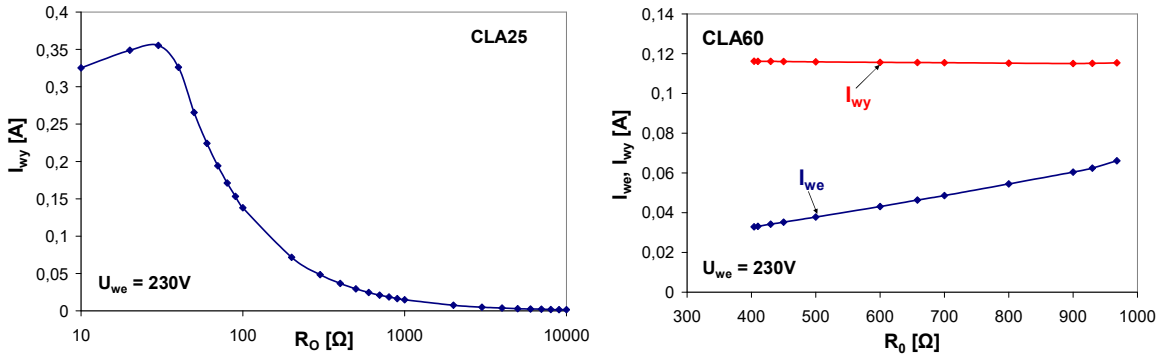

Fig.5. Output current I_{wy} vs. load resistance R_o for investigated power supplies of:
a) CLA25 lamp, b) CLA60 lamp
Rys. 5. Zależność prądu wyjściowego I_{wy} w funkcji rezystancji obciążenia R_o badanych zasilaczy: a) lampy CLA25, b) lampy CLA60.

a) b)

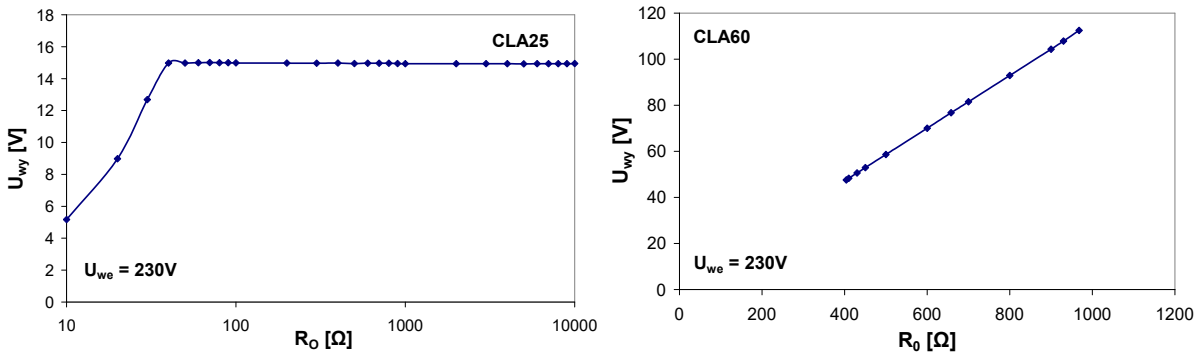

Fig.6. Output voltage U_{wy} vs. load resistance R_o for investigated power supplies of:
a) CLA25 lamp, b) CLA60 lamp
Rys. 6. Zależność napięcia wyjściowego U_{wy} w funkcji rezystancji obciążenia R_o badanych zasilaczy: a) lampy CLA25, b) lampy CLA60.

It is clear that CLA25 power supply operates as pulse voltage regulator in the load resistance range of *c.* 40 Ω to 10 kΩ, while CLA60 power supply operates as pulse current regulator in the load resistance range of *c.* 400 Ω to 1 kΩ. When load resistance exceeds 1 kΩ, CLA60 power supply stops generation of output pulses. Output voltage of CLA60 power supply in the load resistance range from 400 Ω to 1 kΩ is a monotonically increasing function and for R_o = 1 kΩ its value is equal to *c.* 110 V.

The impact of controlling the input (power network) voltage U_{we} on input and output current and output voltage of the investigated LED lamps is analyzed in Fig.7. It may be noted that CLA60 lamp power supply operated correctly with input voltage ranging from *c.* 70V to 230 V, while CLA25 power supply operated correctly for supply voltages in the range of *c.* 10 V to 230 V. CLA25 power supply is characterized by output current level of 350 mA,

which is obtained for input voltage range of *c.* 80 V to 230 V, while CLA60 power supply limits input current to *c.* 120mA for input voltages ranging from 130 V to 230 V. In case of investigated power supplies, the input current starts decreasing after given input voltage is attained, this is 50 V and 100 V for CLA25 and CLA60 power supplies, respectively.

a) b)

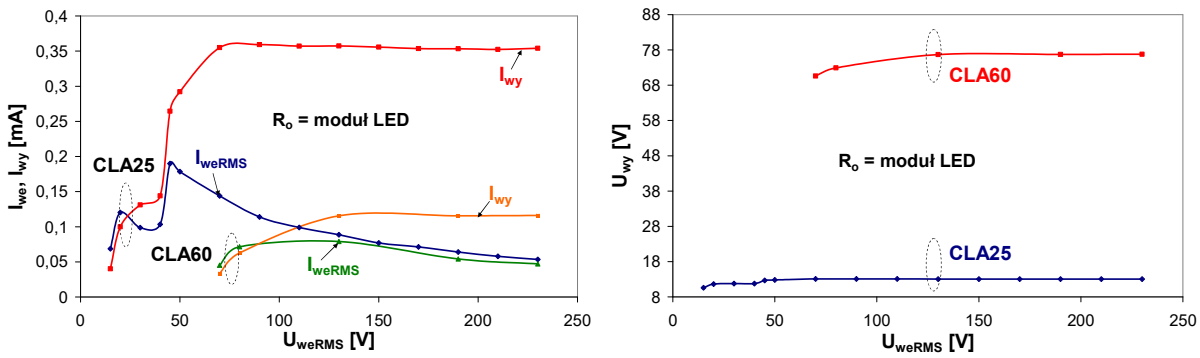

Fig.7. Currents a) I_{wy}, I_{we} and b) output voltage U_{wy} vs. input voltage U_{we} for investigated power supplies
Rys. 7. Zależność prądów: a) I_{we}, I_{wy} i b) napięcia wyjściowego U_{wy} w funkcji napięcia wejściowego U_{we} badanych zasilaczy.

The impact of load resistance R_o on input current harmonics I_{weRMS}, up to harmonic of 53rd order, is shown in Fig.8. Measurable values are exhibited by odd harmonics only.

a) b)

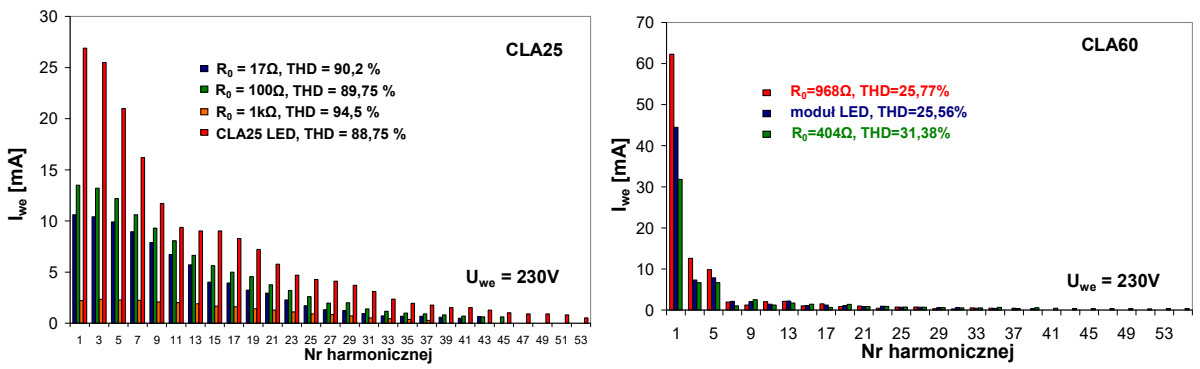

Fig.8. Harmonic spectra of the input current at different load resistance R_o values for investigated power supplies of: a) CLA25 lamp, b) CLA60 lamp
Rys. 8. Wartości harmonicznych prądu wejściowego przy zmiennej rezystancji obciążenia R_o badanych zasilaczy: a) lampy CLA25, b) lampy CLA60.

Analyzing the harmonics, we may conclude that for CLA25 lamp power supply loaded with LED module the values of spectral lines are greater than for CLA60 power supply. For instance, for the 3rd harmonic the respective values are *c.* 25mA (for CLA25 power supply) and 13 mA (for CLA60 power supply). This causes a decrease in THD coefficient value for CLA60 lamp power supply. For CLA60 lamp power supply THD coefficient is equal to only 25.56 %. CLA lamp power supply introduces greater distortions into the power network, THD coefficient attains 88.75 %. Input current of CLA60 power supply contains only more

than ten significant harmonics (about 13), while for CLA25 lamp power supply we may discriminate several tens of significant input current harmonics.

The impact of load resistance R_o on THD value for CLA25 and CLA60 lamp power supplies is shown in Fig.9. Analyzing the curves we may notice that for CLA25 lamp power supply THD coefficient reaches a minimum equal to *c.* 89% at load resistance R_o = 37 Ω. In case of CLA60 lamp power supply THD is a decreasing function of load resistance R_o and values of THD range from 25 to 32%.

a) b)

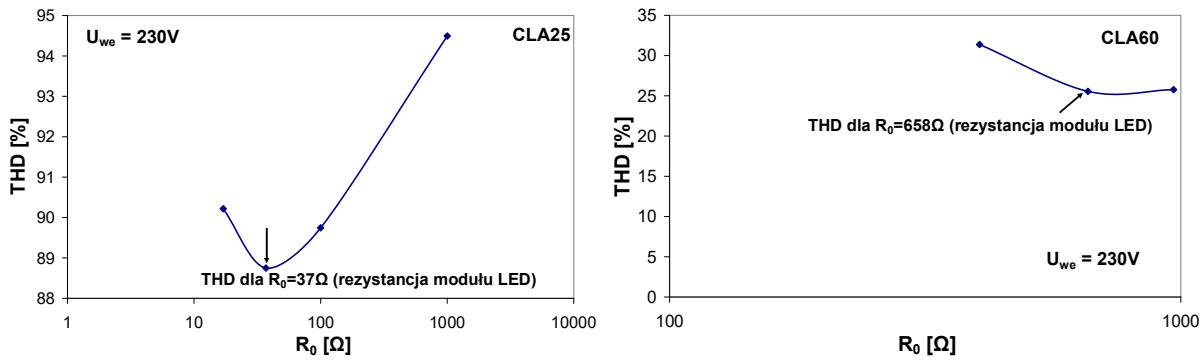

Fig.9. Total harmonic distortion (THD) vs. load resistance R_o for a) CLA25 lamp, b) CLA60 lamp

Rys. 9. Współczynnik zawartości harmonicznych w funkcji rezystancji obciążenia R_o: a) lampy CLA25, b) lampy CLA60.

4. FINAL REMARKS

Test results of power supplies for two selected LED lamps are presented in this paper. The impact of load resistance (or LED module load) and input voltage (RMS value) on the input and output current and output voltage of these sources has been investigated. The results show that the power supply of CLA25 lamp stabilizes the output voltage and the power supply of CLA60 lamp stabilizes the output current. The sources operate correctly within the input voltage range of 50 to 240 V (for CLA60 lamp) and 130 V to 240 V (for CLA25 lamp).

THD coefficient values have also been determined for several different values of load resistance R_o or LED module load, for the tested power supplies of LED lamps. It has been proven that power supply of CLA60 lamp generates smaller distortions, and THD value for this source does not exceed 26% when it is loaded with LED module. CLA25 lamp power supply is characterized by THD coefficient which is three times higher. The input current spectrum of CLA25 displays 53 harmonics against 13 harmonics for CLA60 lamp. From this data we may conclude that power supply of CLA60 lamp better stabilizes the operating point of supplied LED module diodes and, at the same time, the current drawn from the power network is less distorted.

REFERENCES

1. Lasance C. J. M., Poppe A.: Thermal management for LED applications. Springer Science+Business Media, New York, 2014.
2. Schubert E.F.: Light emitting diodes. Second edition. Cambridge University Press, New York, 2008.
3. Magdziak R.: Oświetlenie LED. Raport techniczno-rynkowy. Elektronik, Nr 4, 2014, s. 28-52.
4. Górecki K.: Półprzewodnikowe źródła światła. Akademia Morska w Gdyni, Gdynia, 2010.
5. Chung Y. C., Lee K. M., Choe H. J., Sung C. H., Kang B.: Low-cost drive circuit for AC-direct LED lamps. IEEE Transactions on Power Electronics, Vol. 30, No. 10, 2015, pp. 5776-5782.
6. Pollock A., Pollock H., Pollock C.: High efficiency LED power supply. IEEE Journal of Emerging and Selected Topics in Power Electronics, Vol. 3, No. 3, 2015, pp. 617-623.
7. Poppe A., Siegal B., Farkas G.: Thermal testing of AC LEDs. 27th Annuals IEEE Semiconductor Thermal Measurment and Management Symposium SEMI-THERM, 2011, San Jose, CA, pp. 297-304.
8. Poppe A., Farkas G., Temesvolgyi T., Katona B., Molnar G., Borna C.: Thermal testing of retrofit AC LEDs. 27th Sessions of the International Comission on Illumination CIE, 2011, South Africa, Vol. 1, pp. 962-972.
9. Górecki K.: The influence of power supply voltage on exploitive parameters of the selected lamps. Informacije Midem Journal of Microelectronics Electronic Components and Materials, Vol. 43, No. 3, 2013, pp. 193-198.

Mgr inż. Przemysław PTAK,
Prof. dr hab. inż. Krzysztof GÓRECKI, e-mail: k.gorecki@we.am.gdynia.pl
Prof. dr hab. inż. Janusz ZARĘBSKI, e-mail:j.zarebski@we.am.gdynia.pl
Gdynia Maritime University, Gdynia Electrical Department
Ul. Morska 81-87
81-225 Gdynia