ELEKTRYKA 2016
Zeszyt 3-4 (239-240) Rok LXII

Waldemar BAUER, Jerzy BARANOWSKI, Tomasz DZIWIŃSKI, Paweł PIĄTEK, Marta ZAGÓROWSKA
AGH University of Science and Technology, Kraków

OUSTALOUP PARALLEL APPROXIMATION

Summary: This article presents Oustaloup approximation method for fractional differential systems, which has been modified by the authors. Application of this method by using numerical experiments has been shown and behavior of discrete system has been analyzed.

Keywords: Oustaloup, non-integer order, discretization, linear systems

APROKSYMACJA RÓWNOLEGŁA OUSTALOUPA

Streszczenie. W artykule przedstawiono zmodyfikowaną przez autorów metodę aproksymacji Oustaloupa dla układów różniczkowych niecałkowitego rzędu. Pokazano jej wykorzystanie poprzez eksperyment numeryczny oraz przeanalizowano zachowanie systemu dyskretnego.

Słowa kluczowe: Oustaloup, systemy niecałkowitego rzędu, dyskretyzacja, systemy liniowe

1. INTRODUCTION

Non-integer controllers are a broadly researched topic. Questions of great importance are the design of non-integer order controllers and their approximation allowing discrete implementation (see [1]).

There are some popular methods of constructing non-integer order systems in the form of integer order transfer functions. There are however certain issues with their discretization and subsequent implementation. In this paper the authors propound a new method of approximation of non-integer order systems based on a method proposed by Oustaloup (see [3]).

2. OUSTALOUP APPROXIMATION

Oustaloup filter approximation to a fractional-order differentiator $G(s) = s^{\alpha}$ is widely used in applications \cite{monje2010fractional}. An Oustaloup filter can be designed as:

$$G_t(s) = K\prod_{i=1}^{N}\frac{s+\omega_i^{'}}{s+\omega_i} \tag{1}$$

where:

$$\omega_i^{'} = \omega_b\omega_u^{(2i-1-\alpha)/N} \tag{2}$$

$$\omega_i = \omega_b\omega_u^{(2i-1+\alpha)/N} \tag{3}$$

$$K = \omega_h^{\alpha} \tag{4}$$

$$\omega_u = \sqrt{\frac{\omega_h}{\omega_b}} \tag{5}$$

Approximation is designed for frequencies $\omega \in [\omega_b, \omega_h]$ and N is the order of the approximation. We may observe that its representation assumes the form of a product of a series of stable first order linear systems. Choosing a wide approximation band results in large ω_u and high order of N results in spacing of poles from close to $-\omega_h$ to those very close to $-\omega_b$. This spacing is not linear (there is a grouping near $-\omega_b$) and causes problems in discretization.

3. OUSTALOUP PARALLEL APPROXIMATION

The method proposed in this paper aims to improve the spacing of poles. Instead of creating a high-order approximation (for N>5) over entire $[\omega_b, \omega_h]$ interval, it is proposed to create a sum of the two approximations: one for lower $L(s)$ and the other for higher $H(s)$ frequencies. Order of both approximations is $n = \lfloor N/2 \rfloor$.

$$L(j\omega) \approx j\omega^{\alpha},\ \omega \in [\omega_b, \omega_c] \tag{6}$$

$$H(j\omega) \approx j\omega^{\alpha},\ \omega \in [\omega_c, \omega_h] \tag{7}$$

The division is located in the central frequency ω_c. Both approximations should be connected in a series with lowpass and highpass filters, respectively (both with cutoff

frequency of ω_c). Those series branches are then connected in parallel. Such design is presented in figure 1.

Because low and high bands are approximated separately, such parallel connection is consistent with approximation over the entire band; however, the poles are differently spaced. In this paper conventional first order filters were used.

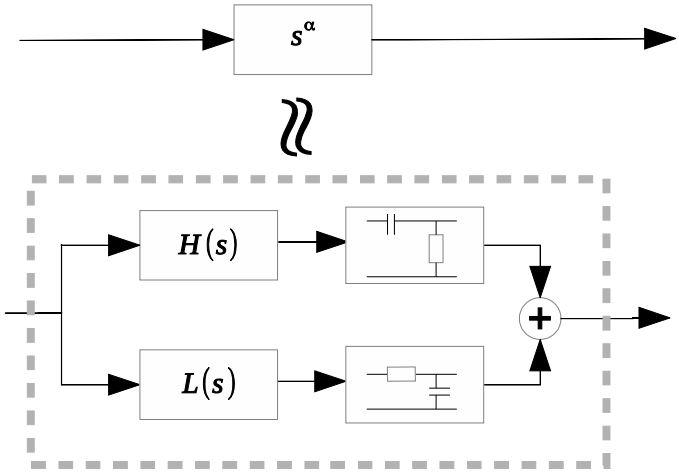

Fig.1. Oustaloup parallel approximation scheme
Rys.1. Schemat aproksymacji równoległej Oustaloupa

3. EXAMPLE

The system $G(s) = s^{0.5}$ has been approximated by conventional and parallel Oustaloup method. The order of approximation was chosen as N = 10 and the band of approximation was $\omega \in [10^{-6}, 10^{6}]$. Central frequency was chosen at $\omega_c = 1$. Parallel Oustaloup method for continuous frequency responses behaves in a manner very similar to the conventional one (see Fig.2). Biggest differences are visible in phase characteristic at the central frequency. However, they are not significant.

Main reason for introducing Oustaloup parallel approximation was the discretization process. Stable conventional Oustaloup approximation becomes unstable when discretized (*cf.* Fig.3). Tustin discretization was used; this preserves stability for ideal numerical computations, but grouping of poles near $-\omega_b$ introduces errors. These errors in basic computations lead to discrete poles that are grouped close to 1, but also outside unit circle. The presented method preserves the stability better in the discretization process, as shown in Fig.4.

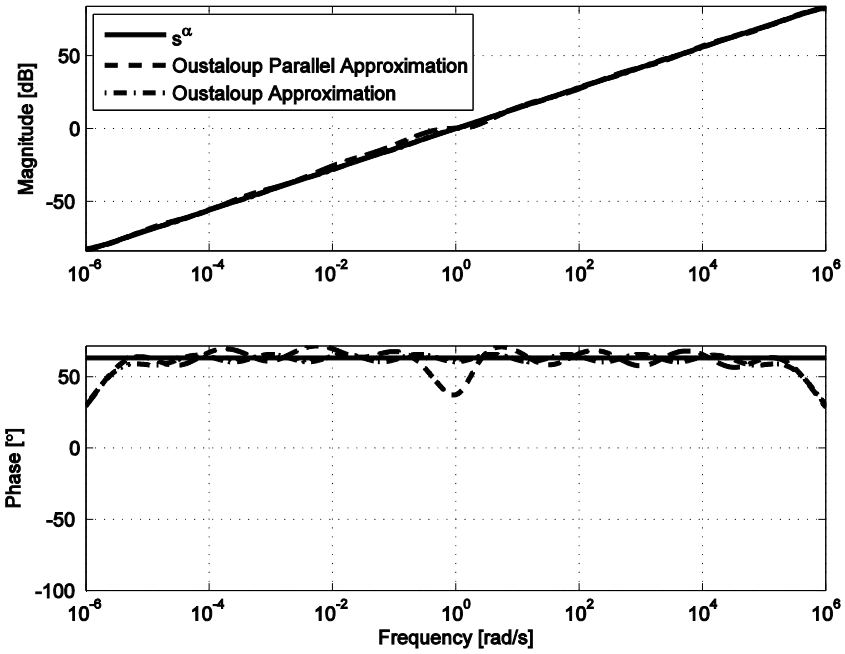

Fig. 2. Oustaloup parallel approximation results
Rys. 2. Wyniki aproksymacji równoległej Oustaloupa

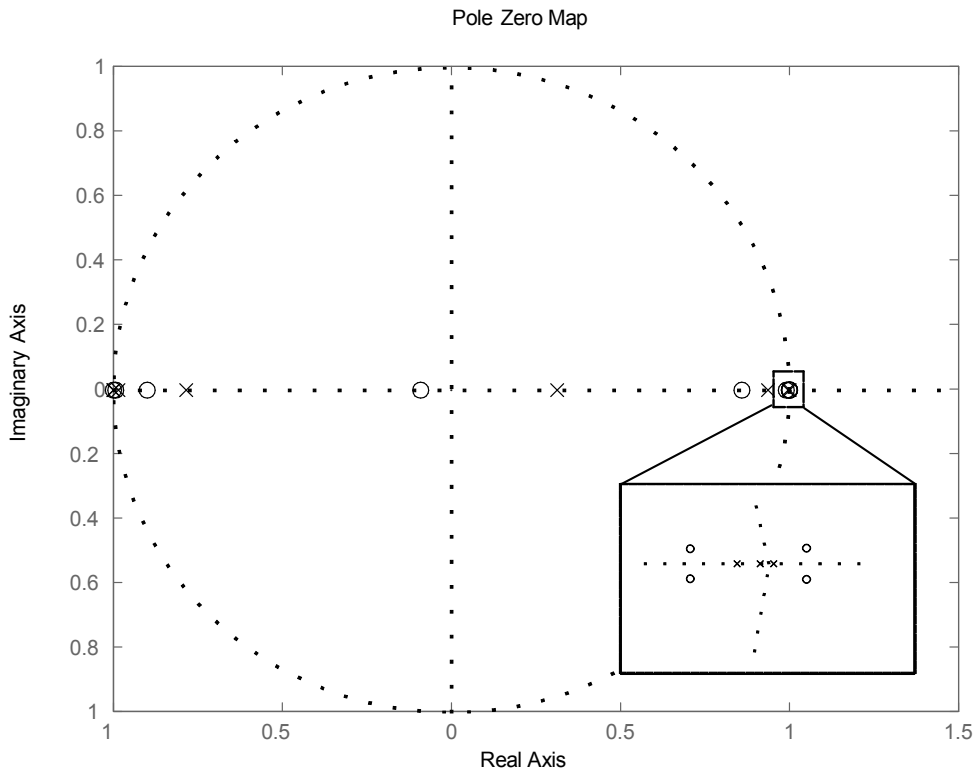

Fig. 3. Oustaloup approximation: discrete poles and zeros
Rys. 3. Aproksymacja Oustaloupa: bieguny i zera układu dyskretnego

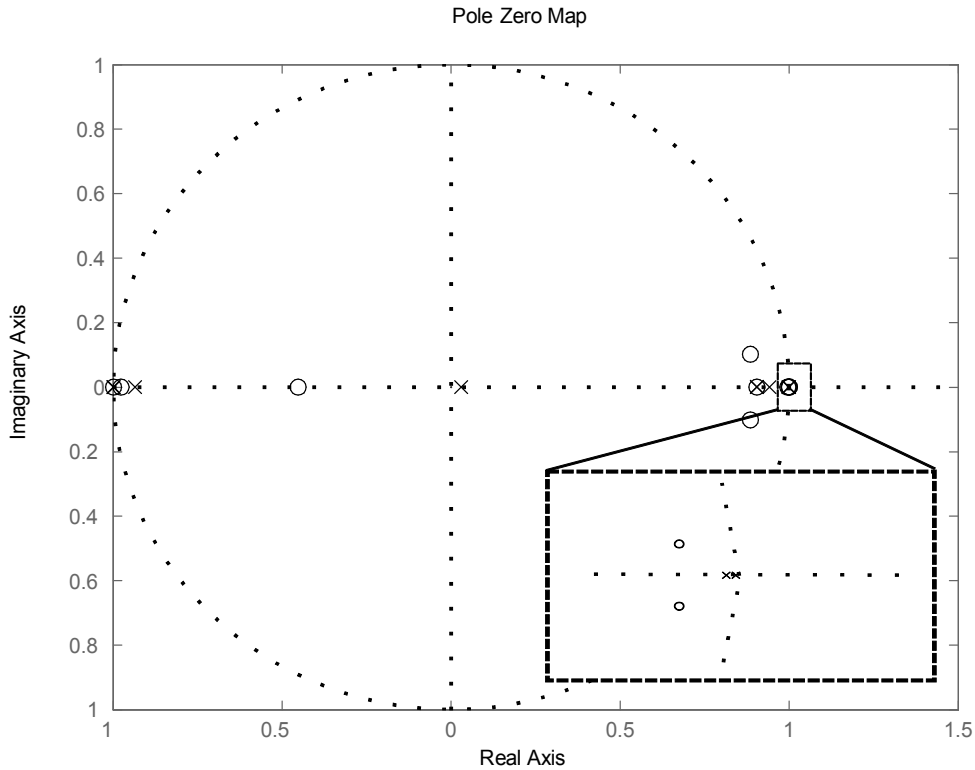

Fig.4. Oustaloup parallel approximation: discrete poles and zeros
Rys.4. Aproksymacja równoległa Oustaloupa: bieguny i zera układu dyskretnego

4. CONCLUSIONS

Proposed method shows promise in preserving stability. In further research it is planned to implement $PI^{\alpha} D^{\mu}$ controllers with this method, investigate selection of different filters to improve frequency response near ω_c and experiment in control of laboratory systems.

ACKNOWLEDGMENT

Work carried out in the framework of project entitled "Design and application of noninteger order subsystems in control systems". Project was financed by National Science Centre (decision No. DEC-2013/09/D/ST7/03960).

REFERENCES

1. Bania P. and Baranowski J.: Laguerre Polynomial approximation of fractional order linear systems. In W. Mitkowski, J. Kacprzyk and J. Baranowski, editors, Advances in the Theory and Applications of Non-integer Order Systems: 5th Conference on Non-integer Order and Its Applications, Cracow, Poland, pages 171-182, Springer, 2013

2. Monje C. A., Chen Y., Vinagre B. M., Xue D. and Feliu V.: Fractional-order systems and controls. Fundamentals and applications. Advances in Industrial Control. Springer-Verlag, London, 2010.
3. Oustaloup A., Levron F., Mathieu B., and Nanot F.M.: Frequency-band complex noninteger differentiator: characterization and synthesis. Circuits and Systems I: Fundamental Theory and Applications, IEEE Transactions on, 47(1):25_39, 2000.

Mgr inż. Waldemar Bauer
AGH Akademia Górniczo-Hutnicza
Faculty of Electrical Engineering, Automatics Computer Science and Biomedial Engineering
Al. Adama Mickiewicza 30, Pawilon B1
30-059, Kraków
e-mail: bauer@agh.edu.pl

Dr inż. Jerzy Baranowski
AGH University of Science and Technology
Faculty of Electrical Engineering, Automatics Computer Science and Biomedial Engineering
Al. Adama Mickiewicza 30, Pawilon B1
30-059, Kraków
e-mail: jb@agh.edu.pl

Mgr inż. Tomasz Dziwiński
AGH University of Science and Technology
Faculty of Electrical Engineering, Automatics Computer Science and Biomedial Engineering
Al. Adama Mickiewicza 30, Pawilon B1
30-059, Kraków
e-mail: tdz@agh.edu.pl

Dr inż. Paweł Piątek
AGH University of Science and Technology
Faculty of Electrical Engineering, Automatics Computer Science and Biomedial Engineering
Al. Adama Mickiewicza 30, Pawilon B1
30-059, Kraków
e-mail: ppi@agh.edu.pl

Mgr inż. Marta Zagórowska
AGH University of Science and Technology
Faculty of Electrical Engineering, Automatics Computer Science and Biomedial Engineering
Al. Adama Mickiewicza 30, Pawilon B1
30-059, Kraków
e-mail: zagor@agh.edu.pl