ELEKTRYKA 2017
Zeszyt 3-4 (243-244) Rok LXIII

Roman KORAB, Robert OWCZAREK, Marcin POŁOMSKI
Silesian University of Technology, Gliwice

COORDINATION OF PHASE SHIFTING TRANSFORMERS BY MEANS OF THE SWARM ALGORITHM

Summary. The use of several phase shifting transformers (PSTs) in an interconnected power system must be coordinated in order to take full advantage of these devices and to avoid adverse interactions. This paper presents an optimization method of PST settings based on the particle swarm optimization (PSO) algorithm. The minimization of an unscheduled flow through a given system was used as the optimization criterion. Simulation results for an IEEE 118-bus test system are given.

Keywords: phase shifting transformer, unscheduled flow, particle swarm optimization

KOORDYNACJA PRZESUWNIKÓW FAZOWYCH ZA POMOCĄ ALGORYTMU ROJOWEGO

Streszczenie. Zastosowanie kilku przesuwników fazowych w połączonym systemie elektroenergetycznym musi być skoordynowane w celu pełnego wykorzystania tych urządzeń i uniknięcia ich niekorzystnych interakcji. W artykule przedstawiono metodę optymalizacji nastaw przesuwników fazowych, opartą na algorytmie roju cząstek (PSO). Jako kryterium optymalizacji zastosowano minimalizację przepływu nieplanowego przez dany system. Pokazano wyniki obliczeń dla sieci testowej zawierającej 118 węzłów.

Słowa kluczowe: przesuwnik fazowy, przepływ nieplanowy, optymalizacja rojem cząstek

1. INTRODUCTION

Liberalization of electrical energy market and increased use of renewable energy sources (RES) (wind power mostly) in the European power system are two basic factors which have contributed to the wide-ranging emergence of so-called unscheduled flows (UF) in the interconnected power systems. UF is defined as unplanned compensating active power flow between different power systems. This effect is in particularly evident in power systems of Central and East Europe, where surplus power from the wind farms located in north Germany is transmitted to south Germany and Austria via transmission lines from neighbouring countries, especially Poland and Czech Republic. The uncontrolled increase of unscheduled

flows which has arisen in the last years constitutes a serious problem for operators of transmission systems (OSP). These flows provide additional significant load to the transmission lines and therefore endanger operational safety of interconnected systems. Moreover, OSPs are forced to limit the amount of power transmitted in cross-border flows (this power is available to the participants of electrical energy markets) as well as to apply extraordinary relief measures [1, 2].

The reaction shown by OSPs to mounting issue of unscheduled flows is the increased interest in application of so-called *phase shifters* or *phase shifting transformers* (PST) used to manage the flow of power in the cross-border lines. In the near future, such devices will be installed in the cross-border tie-lines Poland-Germany and Czech Republic-Germany. The first device is already operating in the cross-border connection between stations in Mikułowo (PL) and Hagenwerder (DE). PST shifters are special-purpose transformers; when installed in the transmission line, they make it possible to control voltage phase shift, and this is equivalent to control of active power flow in the line. However, if several PST devices are installed close to each other (in the geographical sense), adverse interactions of these devices are possible [3, 4, 5]. Therefore, controlling several PST interacting with each other as well as with the transmission line, requires complex co-ordination mechanisms in order to utilize the devices fully and to avoid conflicts, which might result in unexpected behaviour. Several co-ordination methods for devices controlling the flow of power have been described in publications [6–11].

In current paper we show how PST should be controlled in order to obtain optimum or nearly optimum situation for a given system (from the viewpoint of adopted criterion). A method for optimizing PST settings, based on Particle Swarm Optimization (PSO) is presented. The minimization of an unscheduled flow through a given system has been used as the optimization criterion. Results for a test system containing 118 buses are presented.

2. OPTIMIZATION PROBLEM

In our research the optimization problem was targeted at searching for optimum four PST settings (decisive variables), with unscheduled flow minimized (objective function). The unscheduled flow ran through area O1 of test system. PSTs were installed into lines at the intersection O1–O2 (lines 15–33 and 19–34) and O1–O3 (lines 23–24 i 30–38) (Fig.1). The limits of search space were defined by minimum and maximum settings of each PST. Mathematically this problem may be formulated in the following way:

$$\min \quad f(\mathbf{x}) = UF \ , \qquad \mathbf{x} \in \mathbb{R}^4 , \tag{1}$$

where [9]:

$$UF = \frac{1}{2}\left(\sum_{i=1}^{l} |P_i| - \left| \sum_{i=1}^{l} P_i \right| \right) \tag{2}$$

with limits set as:

$$x_{d\,\min} \le x_d \le x_{d\,\max} \ , \qquad d = 1, \ldots, 4 \ , \tag{3}$$

where: $f(\mathbf{x})$ – objective function, UF – unscheduled flow through a given system, l – number of tie-lines of a given system, P_i – flow of active power in i^{th} tie-line (assumed to be positive when power flows out of the system and to be negative when power flows into the system), $\mathbf{x}$ – vector of variables containing PST settings, $\mathbb{R}^4$ – four-dimensional real vector space, x_d – setting of dth phase shifter, $x_{d\,\min}$, $x_{d\,\max}$ – minimum and maximum setting of dth phase shifter.

When the problem is thus defined, there is no analytical formula describing the dependence of objective function on decisive variables (PST settings); therefore, the standard optimization methods cannot be used to solve this problem. That is why we decided to use metaheuristic methods. The method based upon PSO algorithm was used to solve the formulated problem. One of the good points of this algorithm is that it is not necessary to know the objective function gradient in order to carry out optimization. Moreover, the probability of finding the global optimum is high [12].

To avoid the situation when, during the process of determining PST settings, the optimization algorithm might get "stuck" at extremities of allowable setting interval, an approach utilizing the so-called penalty function was used. It was introduced as an additional component of objective function. Mathematically it may be defined as follows:

$$\min \quad F(\mathbf{x}) = f(\mathbf{x}) + p(\mathbf{x}) \ , \qquad \mathbf{x} \in \mathbb{R}^4 , \tag{4}$$

$$p(\mathbf{x}) = a \sum_{d=1}^{4} x_d^2 \ , \tag{5}$$

where: $F(\mathbf{x})$ – objective function taking into account penalty function, $f(\mathbf{x})$ – original objective function, $p(\mathbf{x})$ – penalty function, a – constant penalty coefficient (experimentally selected).

3. PSO ALGORITHM

PSO algorithm was presented in 1995 by Kennedy and Eberhart [13]. This algorithm is biologically inspired and based upon social behaviour of the animal swarm (e.g. fishes or birds), which cooperate with each other in order to find the most advantageous solution of the problem (such as food foraging, escaping from predators etc.)

PSO algorithm employs a collection of particles (called swarm), which is a set of potential solutions of the problem. Optimization process is carried out by iteration; it is based upon finding better and better location of particles in the search space; this finally results in finding an optimal location (best solution), where all swarm individuals gather. During the optimization process, location of each particle is determined on the basis of its previous experience as well as collective (swarm) experience [12]. Location of ith particle is updated by stochastic speed v_i. This approach is described with the following relationships [14]:

$$v_{id}^{k+1} = \omega \cdot v_{id}^{k} + c_1 \cdot r_{1d}^{k} \cdot (p_{id}^{k} - x_{id}^{k}) + c_2 \cdot r_{2d}^{k} \cdot (p_{gd}^{k} - x_{id}^{k}), \tag{6}$$

$$x_{id}^{k+1} = x_{id}^{k} + v_{id}^{k+1}, \qquad i = 1, 2, \ldots, N \;;\; d = 1, 2, \ldots, D, \tag{7}$$

where: N – number of swarm particles, D – number of decisive variables, c_1, c_2 – acceleration coefficients, r_{1d}, r_{2d} – random numbers within the interval [0; 1], ω – coefficient of particle's motion inertia, x_i^k – location of ith particle in k^{th} iteration step, v_i^k – speed of ith particle in k^{th} iteration step, p_i^k – previous best location of ith particle, p_g^k – best location found by swarm leader, k – iteration step.

Coefficients c_1, c_2 control the particle's motion range during a single iteration. In most cases they are identical.

Coefficient ω is responsible for balancing the ability of local and global search of the possible solutions' space. If its value is high, then global search is possible, otherwise local search is more likely. This multiplier may either be constant or else it may be subject to change during optimization process [15].

When PSO algorithm with high selected values of ω, c_1, c_2 coefficients is used, a situation often arises, when particles cross the limits of search space. In order to avoid this effect, speed limitations are usually set [16]:

$$\begin{aligned} &\text{if } v_{id}^{k} > V_{d\max}, \quad \text{then } v_{id}^{k} = V_{d\max}, \\ &\text{if } v_{id}^{k} < V_{d\min}, \quad \text{then } v_{id}^{k} = V_{d\min}, \end{aligned} \tag{8}$$

where: $V_{d\max}$ – maximum particle speed for decisive variable *d*, $V_{d\min}$ – minimum particle speed for decisive variable *d*.

4. TEST CASE

IEEE Test Case, 118-bus system [17] was used in calculations. It contains 118 buses and 186 branches, including 9 transformers. The system was split into 3 areas (Fig.1), containing the following buses:

- area O1: from 1 to 23, from 25 to 32 and 113, 114, 115 and 117,
- area O2: from 33 to 37, from 39 to 61 and 63 and 64,
- area O3: from 65 to 112 and 24, 38, 62, 116 and 118.

Cross-area intersections were created by following lines:

- intersection O1–O2: two lines 138 kV: 15–33 and 19–34,
- intersection O1–O3: one line 138 kV: 23–24 and one line 345 kV: 30–38,
- intersection O2–O3: six lines 138 kV: 47–69, 49–66 (x2), 49–69, 60–62, 61–62; one line 345 kV: 64–65 and transformer 345/138 kV/kV: 38–37.

Bus No. 69 served as a balancing bus. In Fig.1, arrows represent direction of power flow in area intersections in the initial state of the system (before optimization). The data for initial state of test system is shown in Table 1.

Table 1.

Initial data for test system

Test system area	Demand	Generation	Active power losses	Unscheduled flow
	P_L [MW]	P_G [MW]	P_{str} [MW]	*UF* [MW]
O1	963	983	33,66	110,0
O2	1342	1086	34,79	12,9
O3	1937	2290	48,18	12,9
Total	4242	4359	116,64	135,8

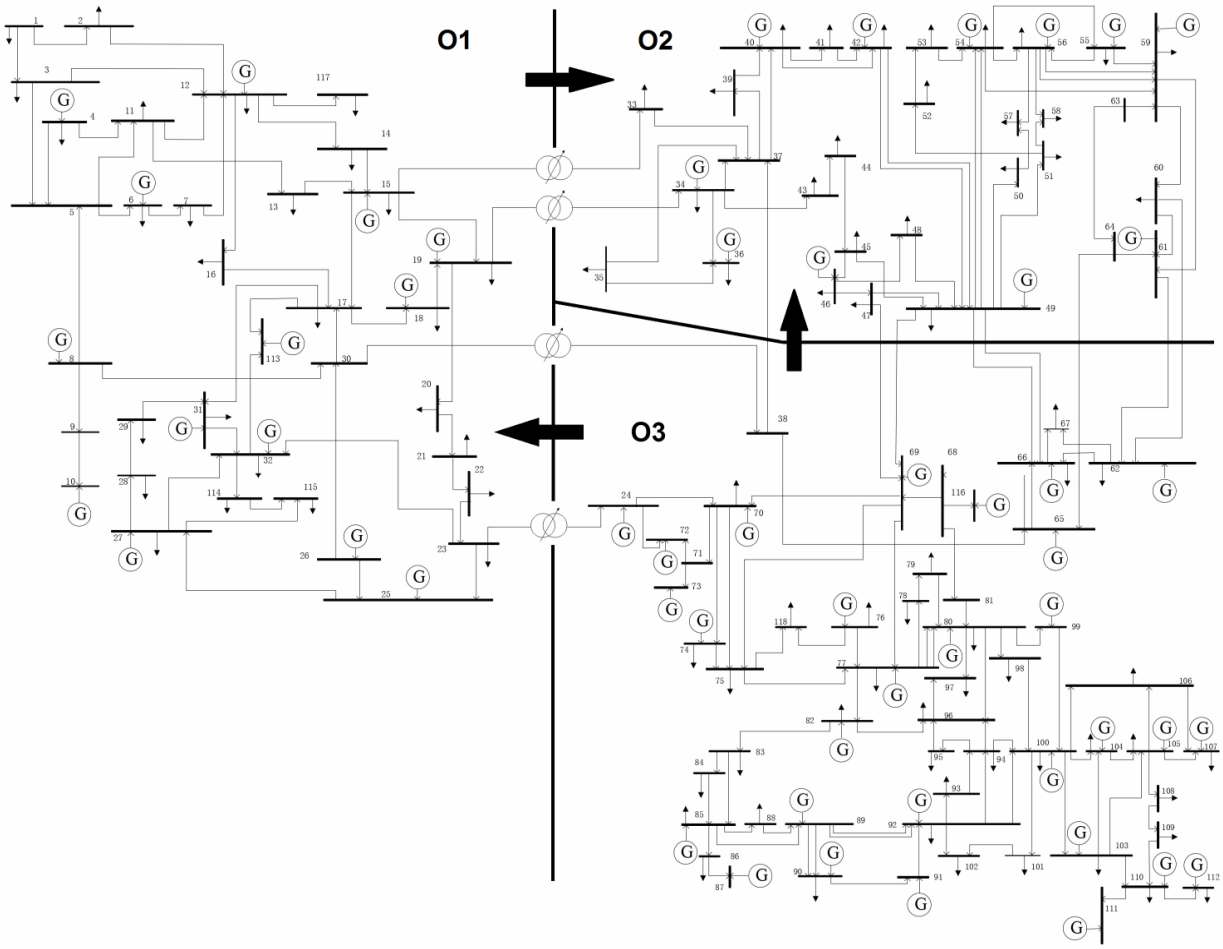

Fig.1. Diagram of the IEEE 118-bus test system [17] with the assumed location of PSTs
Rys.1. Schemat sieci testowej IEEE 118 [17] wraz z założoną lokalizacją PST

5. OPTIMIZATION METHOD FOR PST SETTINGS

In our investigation we used the approach basing on joint application of PSO algorithm and standard method of determining power flow (Newton-Raphson method) (Fig.2).

At the start of optimization algorithm, an initial particle swarm of a given population density is generated. The particles are assigned to random locations and speeds. Location of each particle is represented by a vector containing settings of different PST (potential solutions). Next, the algorithm commences procedures called for a single swarm particle. A model of test system is prepared on the basis of particle parameters (PST settings); this model takes into account the current phase shifters' settings, and then the power flow is determined with the help of Matpower programme operating in Matlab programming environment [18]. The objective function value results from this procedure (i.e. unscheduled flow value). This is subsequently transferred to swarm algorithm. When fitting (objective function value) is found for all particles of the swarm, the best locations of the particles are changed and swarm leader

is chosen. From this point the iteration process is started. Speed and locations of particles are modified, the fitting function value is calculated for each particle, the update of swarm leader is carried out as well as update of best locations of the particles [12]. This algorithm runs iteratively until the end condition is met (e.g. declared number of iterations).

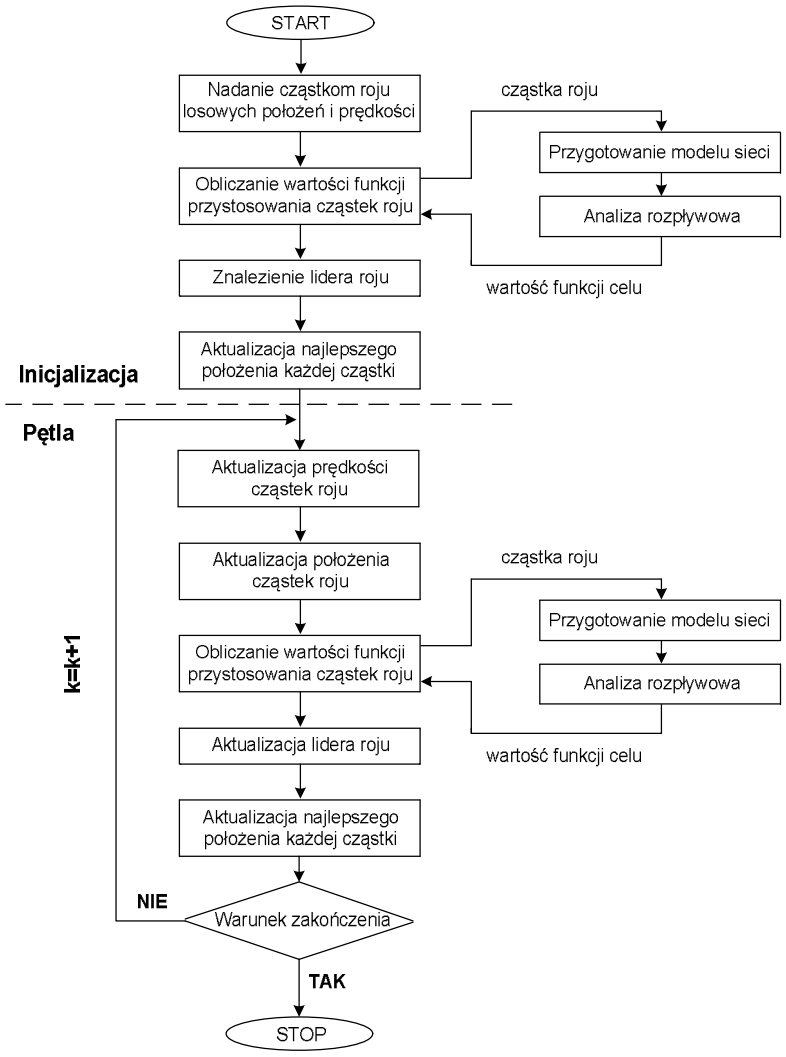

Fig.2. Algorithm of the swarm optimization of PST settings
Rys.2. Algorytm optymalizacji rojowej nastaw PST

6. CALCULATION RESULTS FOR TEST SYSTEM

All calculations were carried out with PC equipped with Intel Core i7-4702MQ 2.2 GHz processor and 64-bit Windows OS. The adopted optimization and PSO algorithm parameters are set out in Table 2.

Table 2.

Assumed optimization and PSO algorithm parameters

Maximum number of iterations in optimization process k_{max}	50
Coefficient of particle motion inertia ω	0.58
Acceleration coefficient c_1	1.25
Acceleration coefficient c_2	1.25
Maximum speed of particle V_{max}	20
Minimum speed of particle V_{min}	–20
Maximum PST setting x_{max}	20°
Minimum PST setting x_{min}	–20°

Results of swarm optimization using criterion of minimizing the unscheduled flow across the O1 area of test system are shown in Fig.3 and 4. All tests were run for identical swarm algorithm parameter settings and results were averaged for 20 runs. It must be stressed that convergence of optimization process is very fast and smaller number of particles may be used, which has a direct bearing on the optimization computational time (Fig.4).

Results of optimization for the best solution after 50 iterations are presented in Table 3. It must be noted that algorithm had found PST setting values, which made it possible to significantly decrease unscheduled power flow across O1 area of test system in relation to initial state of this system. This is accomplished at the cost of increasing active power losses throughout the system (*cf.* results set out in Table 3).

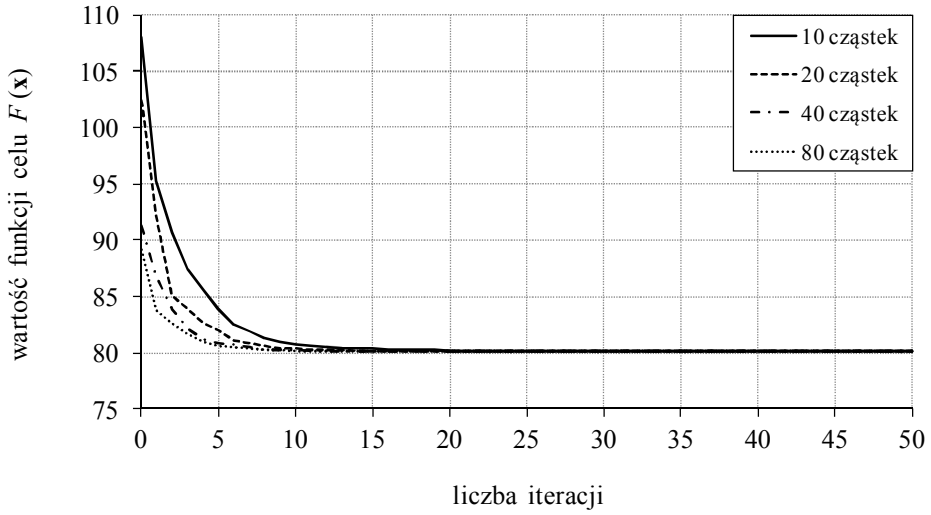

Fig.3. Graph of the fitness function value in consecutive iterations of the swarm algorithm (averaged over 20 runs)

Rys.3. Wykres zmian wartości funkcji celu w kolejnych iteracjach algorytmu rojowego (wartości średnie z 20 testów numerycznych)

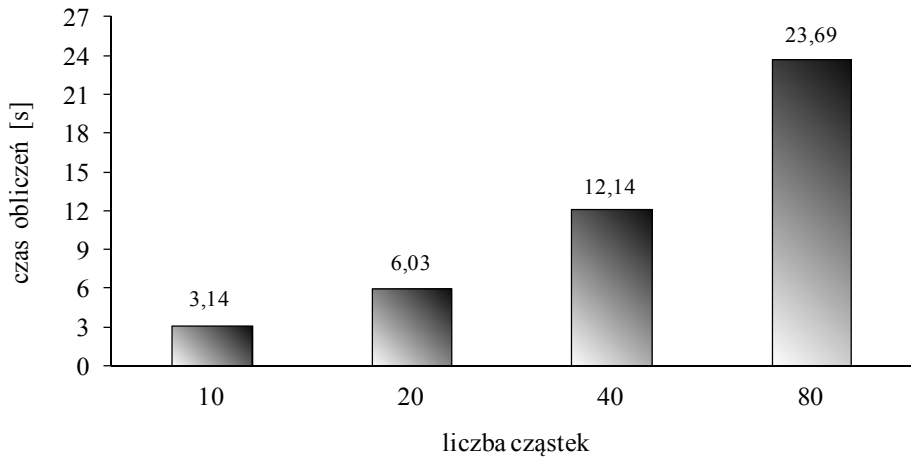

Fig.4. Calculation time for a different number of swarm particles (averaged over 20 runs)
Rys.4. Czas trwania obliczeń dla różnej liczby cząstek roju (wartości średnie z 20 testów numerycznych)

Table 3.

Results of PST settings effected with

Area of test system	Line 15–33	Line 19–34	Line 23–24	Line 30–38	*UF*	Reduction in *UF* [b]	Increase in P_{str} [c]
	PST1	PST2	PST3	PST4			
	[°]	[°]	[°]	[°]	[MW]	[%]	[%]
O1[a]	3.28	7.54	–2.30	–8.52	51.1	53.6	–11.1
O2					8.1	36.8	30.7
O3					8.1	36.8	5.1
Total					67.3	50.4	8.1

[a.] Area of test system, where unscheduled flow was minimized
[b.] Reduction of unscheduled flow in relation to initial state (see Table 1).
[c.] Increase in active power losses in relation to initial state (see Table 1).

7. CONCLUSIONS

Use of several PST within a rather limited geographical area must be coordinated in order to utilize these devices fully and to avoid any adverse interactions between them. Coordination of PSTs is most important, particularly when number of devices present in the power system increases and their distance from each other decreases.

In current paper we solved the problem of coordination by optimizing settings of all PSTs with the help of swarm algorithm. Minimization of unscheduled flow through a given system was adopted as optimization criterion. The method was verified with a test system; results of investigation proved its effectiveness. Moreover, it was demonstrated that limiting

unscheduled flow with PSTs may be achieved at the cost of increasing active power losses in entire network.

Further research in the field of PST coordinated control should be targeted at such optimization of phase shifters' settings, where two objective functions will be used (minimization of unscheduled flow and minimization of active power losses in the system) and extrema of both will be sought simultaneously. Tests using a more complex test system should also be carried out (we have in mind running a series of tests for model of connected power systems 400/220/110 kV of Central and Eastern Europe /PL, DE, CZ, SK, HU, AT, UA/), assuming different power balances in different areas.

REFERENCES

1. Majchrzak H., Purchała K.: Przepływy nieplanowe i ich wpływ na bezpieczeństwo pracy systemu elektroenergetycznego. „Elektroenergetyka – Współczesność i Rozwój" 2012, nr 3–4, s. 8–15.
2. Position of ČEPS, MAVIR, PSE Operator and SEPS regarding the issue of Bidding Zones Definition. Dostępny w WWW: <http://www.pse.pl/uploads/pliki/Position_of_CEPS_MAVIR_PSEO_SEPS-Bidding_Zones_Definition.pdf>. [Dostęp: 2012].
3. Bieroński S., Korab R., Owczarek R.: Wpływ regulacji przesuwników fazowych instalowanych w rejonie Europy Środkowo-Wschodniej na transgraniczne przepływy mocy. „ Kwartalnik Elektryka" 2015, z. 2, s. 7–22.
4. Korab R., Owczarek R.: Application of phase shifting transformers in the tie-lines of interconnected power systems. „Przegląd Elektrotechniczny" 2015, nr 8, s. 166–170.
5. Korab R., Owczarek R.: Impact of phase shifting transformers on cross-border power flows in the Central and Eastern Europe region. „Bulletin of the Polish Academy of Sciences, Technical Sciences" 2016, vol. 64, no. 1, pp. 127–133.
6. Oudalov A., Cherkaoui R., Germond A.J., Emery M.: Coordinated power flow control by multiple FACTS devices. Power Tech Conference, Bologna, Italy, 23–26 June 2003.
7. Marinescu B., Coulondre J. M.: A coordinated phase shifting control and remuneration method for a zonal congestion management scheme. Power Systems Conference and Exposition, New York, USA, 10–13 Oct. 2004.
8. Marinakis A., Glavic M., Van Cutsem T.: Control of phase shifting transformers by multiple transmission system operators. Power Tech Conference, Lausanne, Switzerland, 1–5 July 2007, pp. 119–124.

9. Marinakis A., Glavic M., Van Cutsem T.: Minimal Reduction of Unscheduled Flows for Security Restoration: Application to Phase Shifter Control. „IEEE Transactions on Power Systems" 2010, vol. 25, no.1, pp. 506–515.
10. Verboomen J.: Optimisation of transmission systems by use of phase shifting transformers. PhD Thesis. Technische Universiteit Delft 2008.
11. Häger U., Lehnhoff S., Rehtanz C., Wedde H. F.: Multi-Agent System for Coordinated Control of Facts Devices. Intelligent System Applications to Power Systems, Curitiba, Brazil, 8–12 Nov. 2009, pp. 1–6.
12. Szczepanik M.: Algorytmy rojowe w optymalizacji układów mechanicznych. Monografia. Wydawnictwo Politechniki Śląskiej, Gliwice 2013.
13. Kennedy J., Eberhart R.C.: Particle Swarm Optimization. International Conference on Neural Networks, Perth, Australia, 1995, pp. 1942–1948.
14. Shi Y., Eberhart R.C.: A modified particle swarm optimizer. International Conference on Evolutionary Computation, Anchorage, Alaska, 4–9 May 1998, pp. 69–73.
15. Eberhart R.C., Shi Y.: Particle swarm optimization: developments, applications and resources. Congress on Evolutionary Computation, Seoul, Korea, 27–30 May 2001, pp. 81–86.
16. Kennedy J., Eberhart R.C.: Swarm Intelligence. Morgan Kaufmann Publishers, San Francisco 2001.
17. Power Systems and Evolutionary Algorithms.
Dostępny w WWW: <http://www.al-roomi.org/power-flow/118-bus-system>.
18. Zimmerman R.D., Murillo-Sánchez C.E., Thomas R.J.: MATPOWER: Steady-State Operations, Planning and Analysis Tools for Power Systems Research and Education. „IEEE Transactions on Power Systems" 2011, vol. 26, no.1, pp. 12–19.

Dr hab. inż. Roman KORAB
Mgr inż. Robert OWCZAREK
Silesian University of Technology
Institute of Power Systems Engineering and Control
ul. Bolesława Krzywoustego 2
44-100 Gliwice
e-mail: Roman.Korab@polsl.pl
Robert.Owczarek@polsl.pl

Dr inż. Marcin POŁOMSKI
Silesian University of Technology
Faculty of Electrical Engineering, Institute of Electrical Engineering and Computer Science
ul. Akademicka 10
44-100 Gliwice
e-mail: Marcin.Połomski@polsl.pl